BLACK Cube Comfort

Construction guide

BLACK Cube Comfort 2.2m

Compatible with both Front Glass Wall and Front Wooden Wall construction options, including Half panoramic and Panoramic construction.

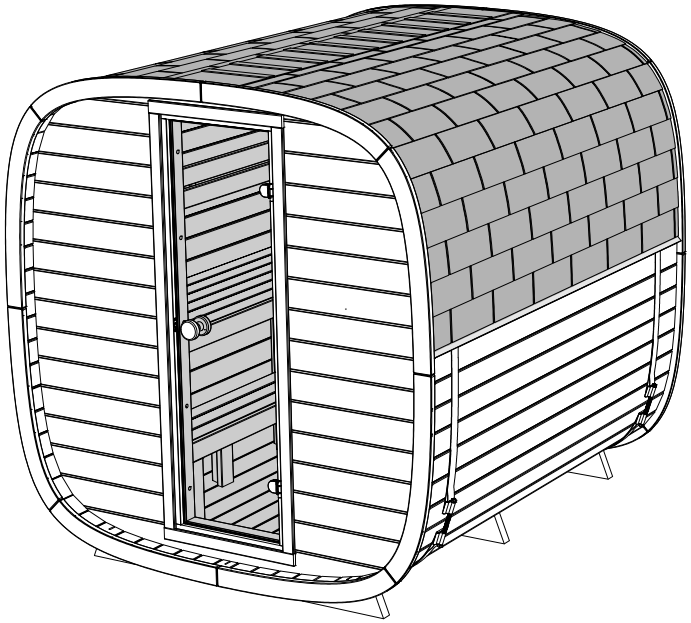

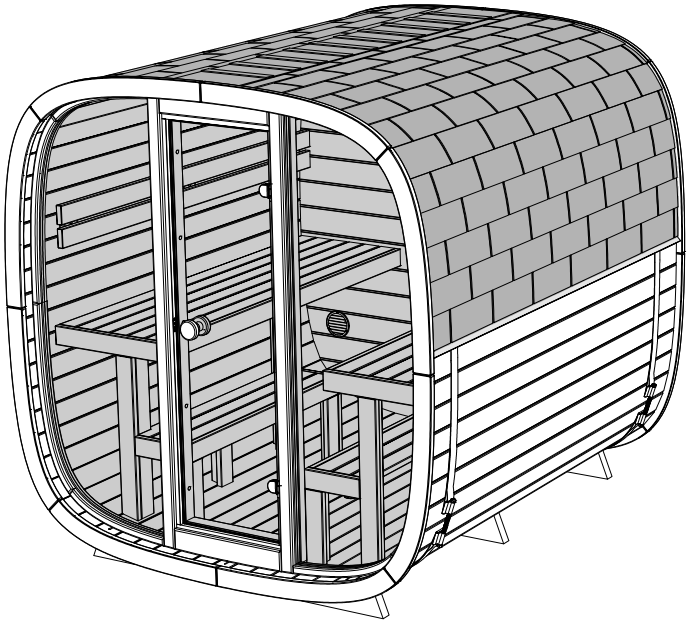

Read the manual and check the parts for completeness before assembly!

Images are illustrative and may differ from reality, the construction principle is the same!!!

USER MANUAL OF THE SAUNA

1. It is recommended to install the sauna above ground level to prevent the legs of the sauna from coming into direct contact with the ground. Install a water-resistant material, such as bitumen strips, between the legs of the sauna and the base.
2. Make sure that the surface on which you install the sauna is levelled and stable both before and after installing the sauna. Otherwise, the doors of the sauna may not open and close properly.
3. If the top part of the chimney has not been installed upon delivery of the sauna, it should be placed into the chimney pipe from the roof of the sauna.
4. During the first heating of the sauna, it must be constantly supervised and the doors should be kept open, as the stove emits a specific smell when first heated. Read more from the user manual of the sauna stove.
5. The maximum permitted temperature of the steam room is **+90 °C**. If heated to a higher temperature, the sauna may be overheated.
6. After each use of the sauna, it is recommended to keep the stove warm, the doors open, and the footrests up for a while to allow the sauna to dry from the inside. If necessary, the water on the floor should be directed to the drain with a floor scraper to avoid damage caused by excess humidity.
7. **When the weather is humid and if the wood has expanded, the metal hoops around the sauna should be loosened to avoid breaking the clamps and jamming the doors.** The hoops can be adjusted from the nut of clamp M12 located on the side of the sauna. To alleviate excess tension on the clamp and the hoop itself, loosen nut M12 (wrench no. 19) until the hoop can be shifted left and right. Then, re-tighten the nut until the hoop is under slight pressure and pressed fully against the wood so that it cannot be pulled away from the walls of the sauna. **When the weather is less humid and the wood has dried, the metal hoops around the sauna should be tightened from nut M12.** Tighten the nut so the hoop is under slight pressure. The hoop must be pressed fully against the wood so that it cannot be pulled away from the walls of the sauna. Saunasell OÜ is not liable for damage caused to the sauna due to a broken hoop clamp.
8. If the door is shifted out of place when the hoops are tightened, lift the exterior door off the hinges and regulate the hinges. If this is not a sufficient solution, remove the trims of the door and unscrew the screws of the doorframe beneath them. This will relieve the pressure on the door. If necessary, the opening of the door may be made wider, after which the screws should be re-tightened and the trims and door reinstalled.
9. The interior door should be regulated from the stopper and, if necessary, the hinges. If this is not a sufficient solution, remove the trims of the door and unscrew the screws of the doorframe beneath them. This will relieve the pressure on the door.
10. Locking the sauna door from the inside is prohibited.
11. In order to avoid damage caused by the weight of snow, any snow should be removed from the roof of the sauna. Keep in mind that the roof covering should not be damaged during snow removal.
12. If your sauna has lighting, install a 3G 2,5 mm^2 outdoor power cable and connect it in juniper box provided with the sauna (L1 – brown , N – blue , GR – green-yellow). The power cable of the sauna must be connected to a residual-current circuit breaker! Consult an electrician if necessary.

Maintenance of the sauna

1. **The interior surfaces of the sauna, the window frames of the steam and washing room, and the frames of interior doors must be treated with a special substance before initial use to protect them from humidity and dirt and extend the useful life of the sauna.** Later, this should be done once or twice a year. TEKNOS Satu Saunasuoja or Tikkurila Supi Saunasuoja may be used for this.
2. **Before initial use of the sauna, the benches and footrests must be treated with a protective oil to extend their useful life.** Later, this should be done once or twice a year. TEKNOS Satu Laudesuoja or Tikkurila Supi Laudesuoja may be used for this.
3. **Before initial use of the sauna and once a year after that, the door, doorframe, threshold, and window frame of the anteroom as well as the floors of the washing room and anteroom should be treated with the lacquer Teknos Helo Aqua 40.**
4. **The exterior surfaces of the sauna are given the first protective coating during production(DIY saunas are not treated). The second coating should be applied approximately two months after purchasing the sauna to extend its useful life and maintain its appearance.** Use Remmers Aidol HK-Lasur for this.
5. Saunasell OÜ is not liable for damage caused to the sauna due to insufficient maintenance or no maintenance at all.

WARRANTY

- The products have a 24-month warranty covering material and production defects, taking effect from the delivery of the sauna to the client.
- The warranty is valid if the user has reviewed the user manuals and abides by them.
- The warranty is void if the sauna has not been assembled by Saunasell OÜ.
- Please note! The warranty period differs for products on trailers and products intended for commercial use.
- The warranty does not cover defects characteristic of wood, such as discoloration, changes, issues, or cracks caused by alternating or excess humidity, etc.
- The warranty does not cover cracking of the bitumen sealant between the roof covering and the end arches due to drying of the wooden material. If the sealant cracks, the old sealant must be replaced with a new one (ROOF REPAIR SEALANT SOUDAL ROOF REPAIR 310 or similar).
- The warranty does not cover normal wear and tear of the product caused by its use and damage caused by incorrect installation or use is not compensated.
- The warranty does not cover damage caused by thunder or other weather phenomena.
- The warranty does not cover damage caused by incorrect installation by the client.
- The warranty expires when attempts are made to independently change or fix the product or if it is not used for its intended purpose.
- The warranty is void if the product is stored in an incorrect position or in the wrong conditions.
- The warranty is valid if the buyer informs the seller of the defect within a reasonable time (7 days).

CONTENTS

- Exterior construction (Drawing):

  BLACK Cube Comfort 2.2m [~7'-2 3/4"] (Straight benches) views
  BLACK Cube Comfort 2.2m [~7'-2 3/4"] (Straight benches) options

- Bench assembly (Drawing):

  BLACK Cube 2.2m Comfort [~7'-2 3/4"] (Straight benches) sectional views from inside

- Exterior construction (Detail list):

  Detail list 1
  Detail list 2
  Detail list 3 (Optional)
  Detail list 4

- Bench assembly:

  Detail list 5
  Detail list 6
  Detail list 7 (Optional)

- Tools and materials:
- Exterior construction:

  Floor construction and preparation . . . . . 1.1 - 1.6
  Preparation of the walls . . . . . 2.1 - 2.4
  Construction of walls . . . . . 3.1 - 3.7
  Roof preparation and construction . . . . . 4.1 - 4.7
  Installation of doors and vent covers . . . . . 5.1 - 5.5

- Bench assembly:

  Bench assembly (benches, grates, etc.). . . . . 6.1 - 6.8
  Bench assembly (bench skirt). . . . . 7.1 - 7.2

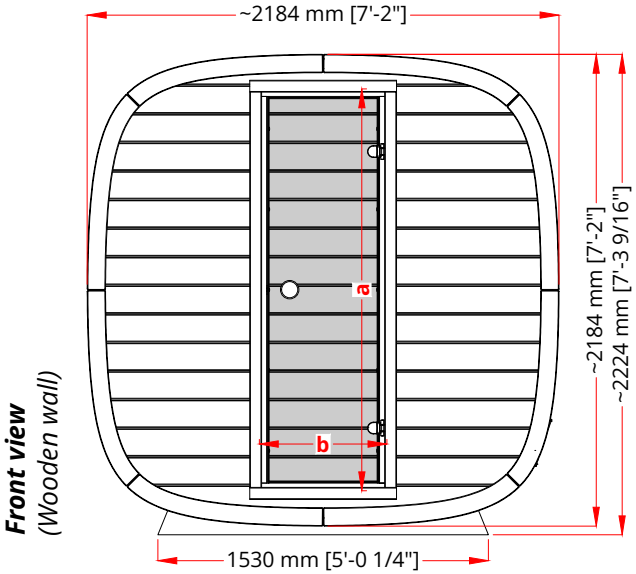

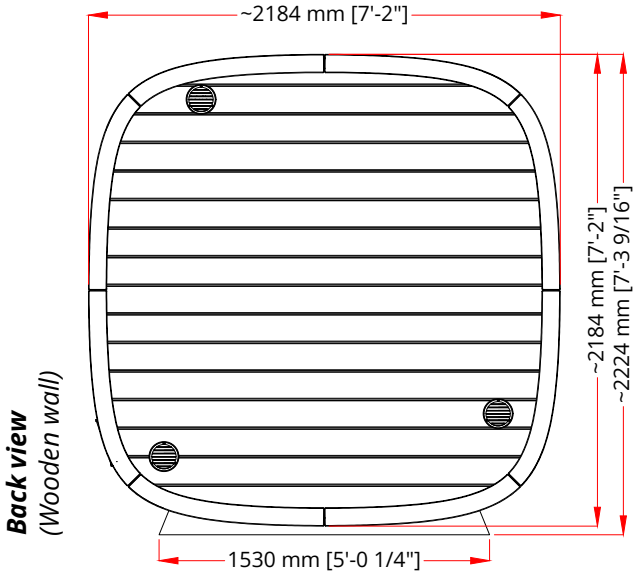

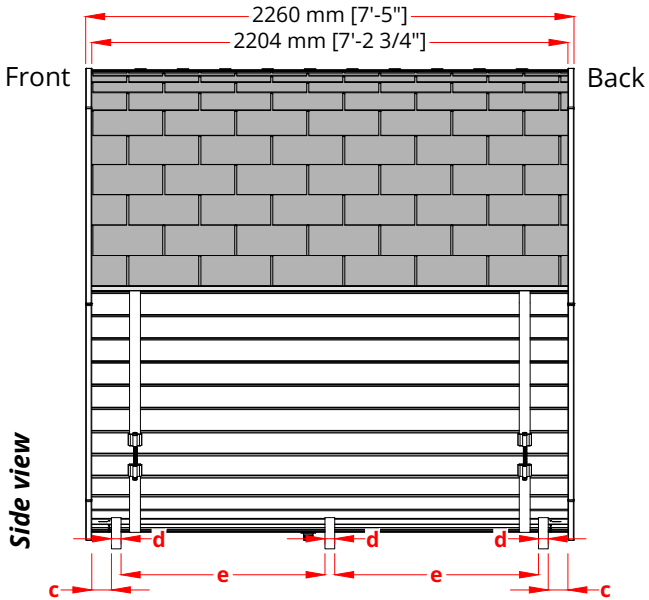

a	1860 mm	~ 6'-1 1/4"
b	590 mm	~ 1'-11 1/4"
c	91 mm	~ 0'-3 9/16"
d	45 mm	~ 0'-1 3/4"
e	~943.5 mm	~ 3'-1 1/8"

Front wall options

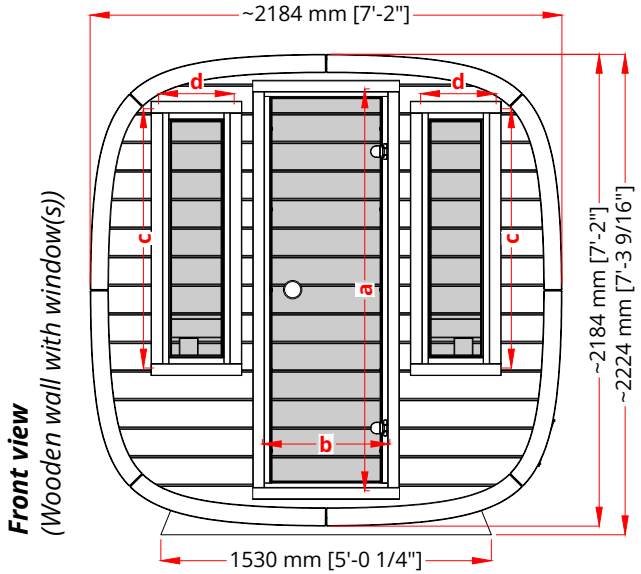

Front view
(Wooden wall with window(s))

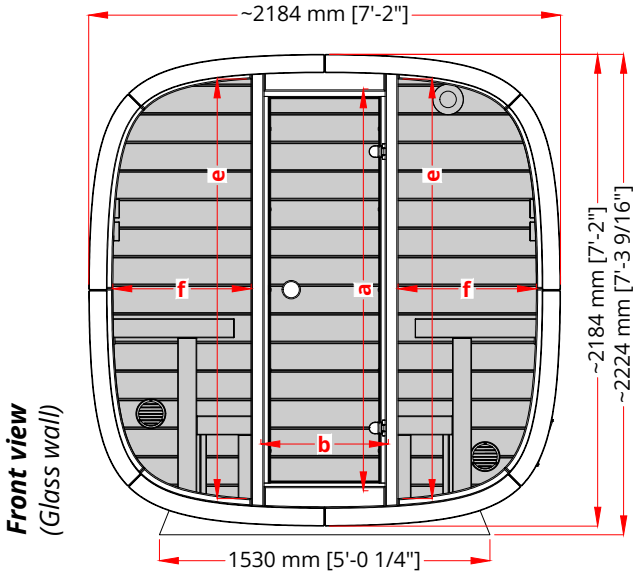

Front view
(Glass wall)

Back wall options

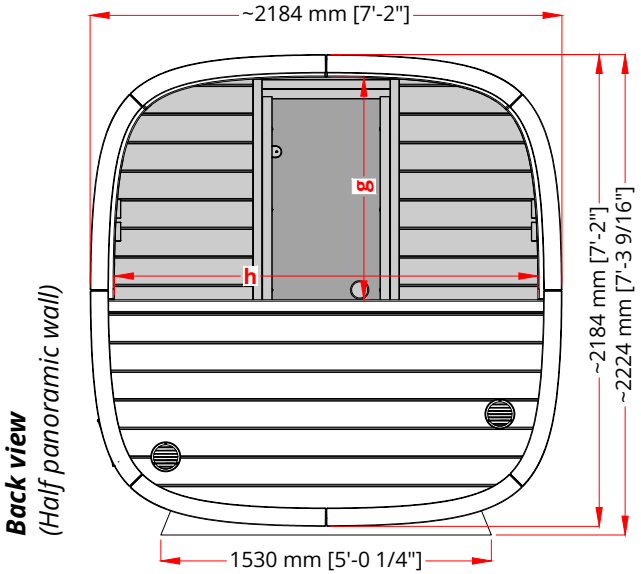

Back view
(Half panoramic wall)

a	1860 mm	~ 6'-1 1/4"
b	590 mm	~ 1'-11 1/4"
c	1200 mm	~ 3'-11 1/4"
d	350 mm	~ 1'-1 3/4"
e	~1942 mm	~ 6'-4 1/2"
f	~640 mm	~ 2'-1 3/16"
g	~1030 mm	~ 3'-4 9/16"
h	~1960 mm	~ 6'-5 1/8"

(Straight benches)

wall opitions

	Dimensions and lengths	
A1	~ 2184 mm	~7'-2"
B1	~ 2122 mm	~6'-11 1/2"
C1	~ 2038 mm	~6'-8 1/4"
D1	2260 mm	~7'-5"
E1	2204 mm	~7'-2 3/4"
F1	70 mm	~0'-2 3/4"
G1	1980 mm	~6'-5 15/16"
H1	85 mm	~0'-3 3/8"
I1	590 mm	~1'-11 1/4"
A2	~ 2165 mm	~7'-1 1/4"
B2	~ 2200 mm	~7'-2 5/8"

	Dimensions and lengths	
a	1900 mm	~6'-2 13/16"
b	1900 mm	~6'-2 13/16"
c	~ 596 mm	~1'-11 7/16"
d	308 mm	~1'-0 1/8"
e	1200 mm	~3'-11 1/4"
f	194 mm	~0'-7 5/8"
g	360 mm	~1'-2 3/16"
h	450 mm	~1'-5 11/16"
i	430 mm	~1'-4 15/16"
j	~ 173 mm	~0'-6 13/16"
k	~ 107 mm	~0'-4 3/16"

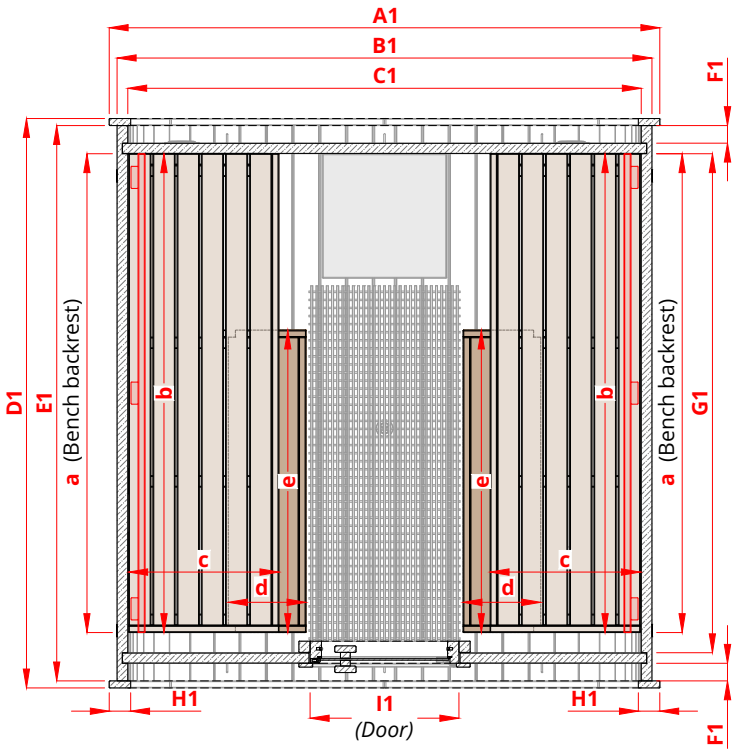

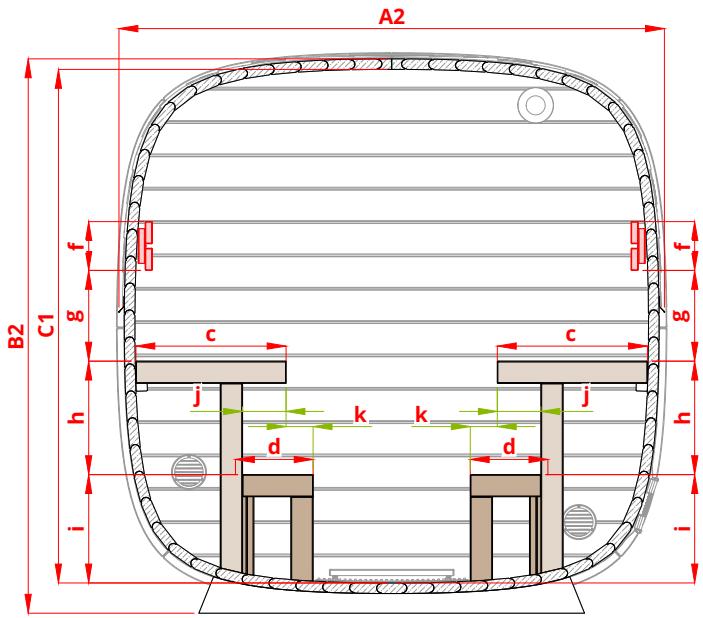

(Straight benches)

Sectional views from inside

** Depends on the wall options selected.*

Detail profiles

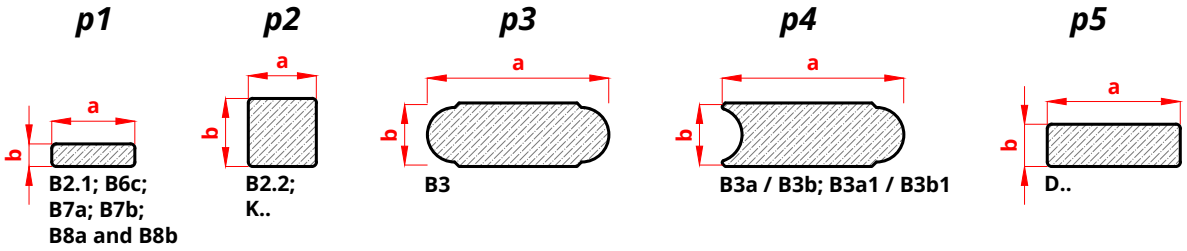

	a	b	a	b
p1	~55 mm	~15 mm	~ 0'-2 3/16"	~ 0'-0 9/16"
p2	~45 mm	~45 mm	~ 0'-1 3/4"	~ 0'-1 3/4"
p3	~120 mm	~40 mm	~ 0'-4 3/4"	~ 0'-1 9/16"
p4	~120 mm	~40 mm	~ 0'-4 3/4"	~ 0'-1 9/16"
p5	~88 mm	~28 mm	~ 0'-3 7/16"	~ 0'-1 1/8"

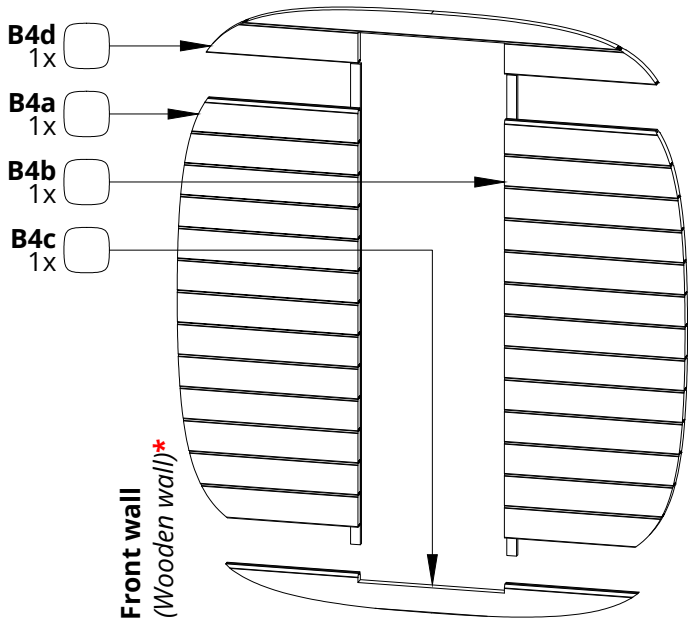

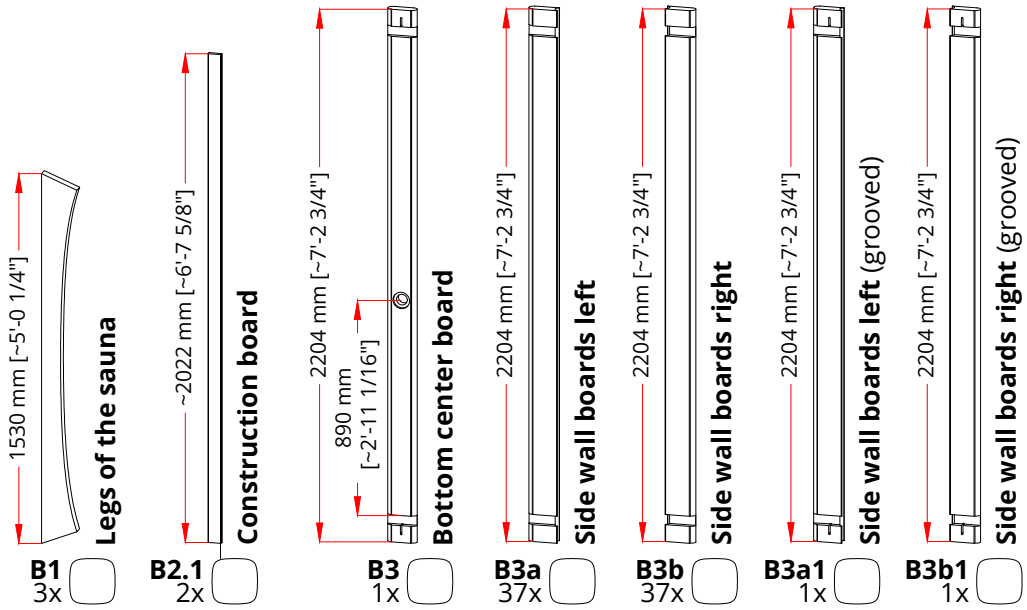

B3a and B3b look the same.
For construction, divide into equal quantities

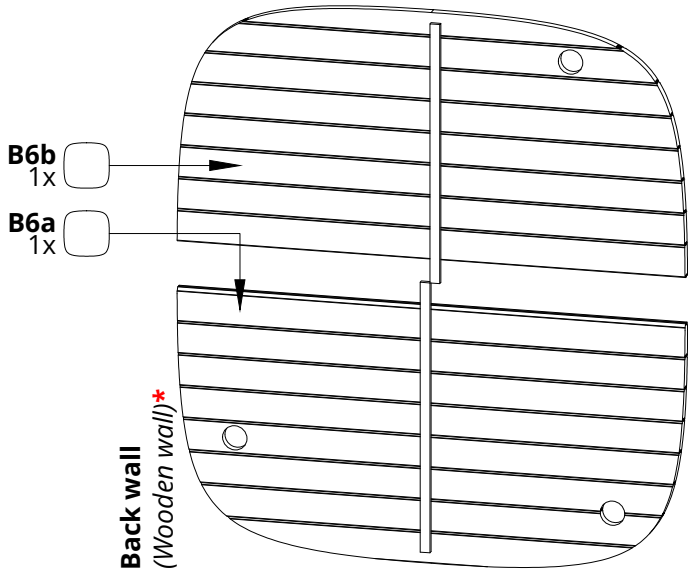

Detail list 1

Exterior construction

** Depends on the door (wall) options selected.*

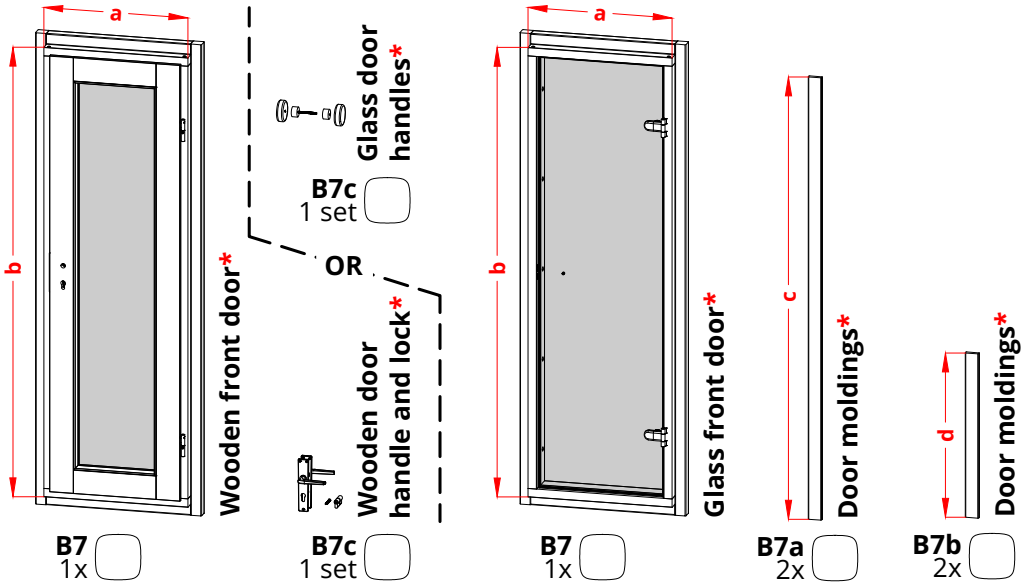

Dimensions and lengths					
a	590 mm	~ 1'-11 1/4"	M1 - Length	~7.9 m	~ 25'-11"
b	1860 mm	~ 6'-1 1/4"	R1 - Length	~1.6 m	~ 5'-3"
c	~1830 mm	~ 6'-0 1/16"	R2 - Length	~2.2 m	~ 7'-2 5/8"
d	~680 mm	~ 2'-2 3/4"	R3 - Length	~2.3 m	~ 7'-6 9/16"

Wood protection and sealing materials

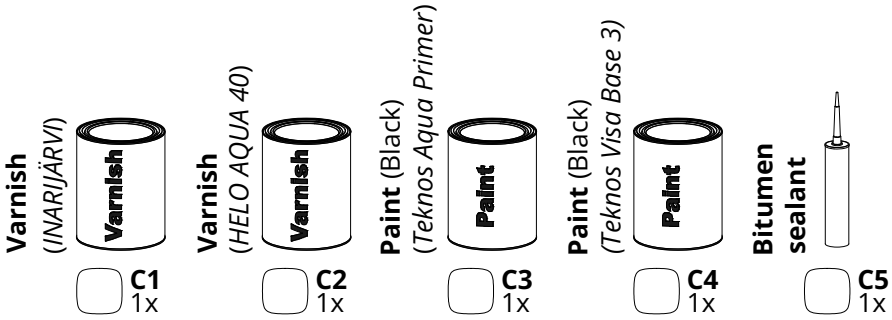

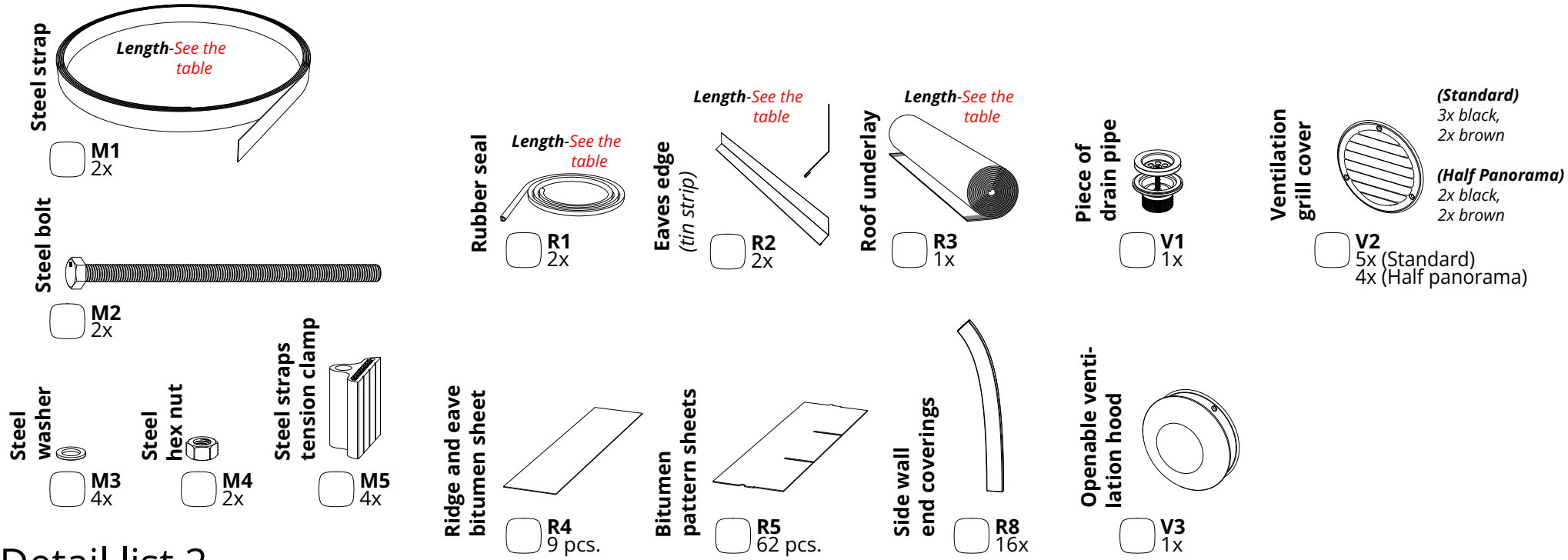

Detail list 2

Exterior construction

*** Door molding **B7a** will be removed during construction.*

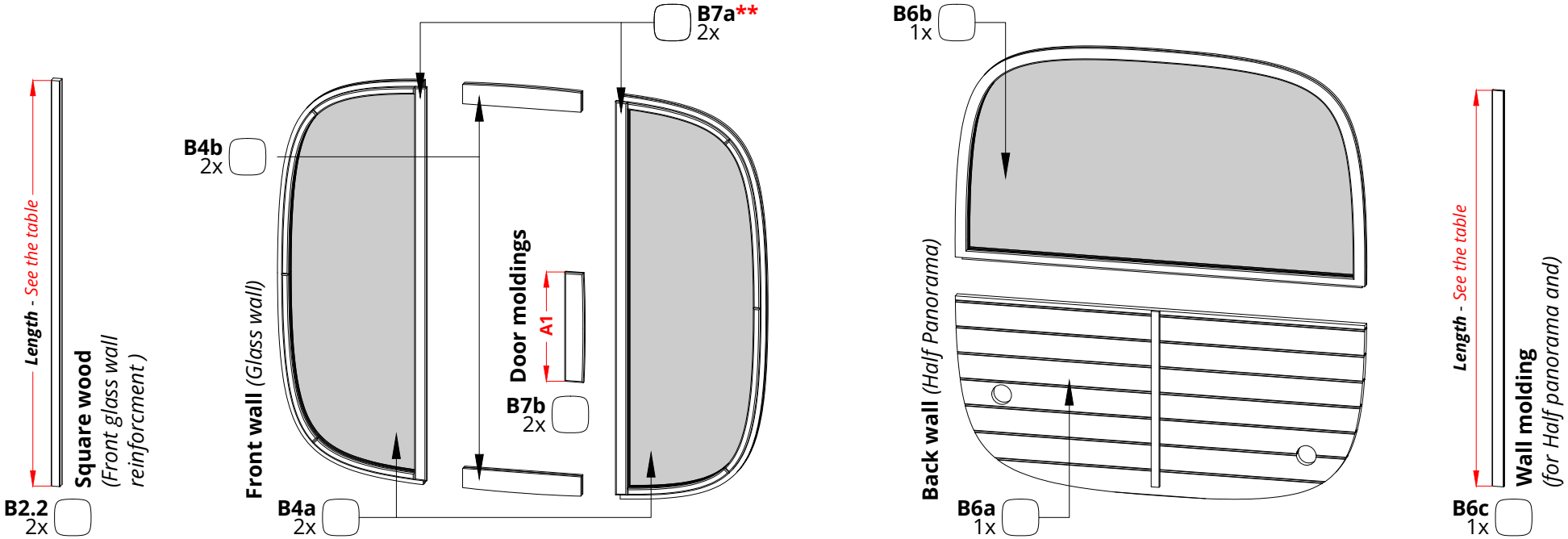

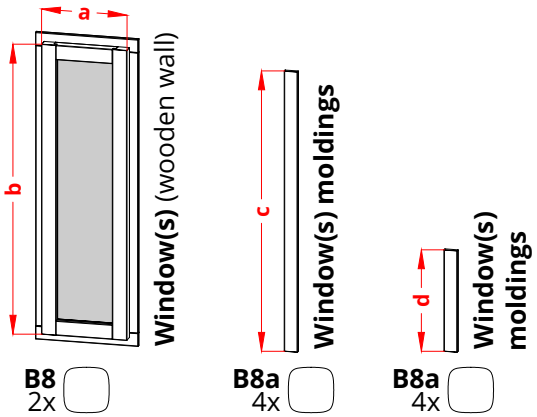

Dimensions and lengths		
a	350 mm	~ 1'-1 3/4"
b	1200 mm	~ 3'-11 1/4"
c	~1160 mm	~ 3'-9 11/16"
d	~420 mm	~ 1'-4 9/16"
B2.2 - Length	~2080 mm	~ 6'-9 7/8"
A1 - Length	~560 mm	~ 1'-10 1/16"
B6c - Length	~2030 mm	~ 6'-7 15/16"

Detail list 3 (Optional)

Exterior construction

Fasteners for the main construction of the sauna:

Name in manual	Nails and screws / Screw size	Quantity
S7	4,5x80mm [~3/16x~3 1/8] for **Spruce**	60
	4,2x75mm [~3/16x~2 15/16] for **Thermo**	
S6.1	*(Black coated)* 4,5x70mm [~3/16x~2 3/4]	50
S5	4,5x60mm [~3/16x~2 3/8] for **Spruce**	140
	4,2x55mm [~3/16x~2 3/16] for **Thermo**	
S2	3x40mm [~1/8x~1 9/16]	10
S1	3x30mm [~3/16x~1 15/16]	30
R6	**Nail** 2,5x20mm [~1/8x~13/16]	1kg

Fasteners for sauna door(s):

Name in manual	Nails and screws / Screw size	Quantity
S6.2	4,2x75mm [~3/16x~2 15/16]	20
S3.2	*(Nano black coating)* 4,5x50mm [~3/16x~1 15/16]	20
P	Hole plug	15

(OPTIONAL) Fasteners for Front glass wall:

Name in manual	Nails and screws / Screw size	Quantity
S5	4,5x60mm [~3/16x~2 3/8] for **Spruce**	15
	4,2x55mm [~3/16x~2 3/16] for **Thermo**	

(OPTIONAL) Fasteners for Half Panoramic back wall:

Name in manual	Nails and screws / Screw size	Quantity
S7	4,5x80mm [~3/16x~3 1/8] for **Spruce**	5
	4,2x75mm [~3/16x~2 15/16] for **Thermo**	
S5	4,5x60mm [~3/16x~2 3/8] for **Spruce**	5
	4,2x55mm [~3/16x~2 3/16] for **Thermo**	
S2	3x40mm [~1/8x~1 9/16]	5

(OPTIONAL) Fasteners for sauna window(s):

Name in manual	Nails and screws / Screw size	Quantity
S7	4,5x80mm [~3/16x~3 1/8] for **Spruce**	40
	4,2x75mm [~3/16x~2 15/16] for **Thermo**	
S6.2	4,2x75mm [~3/16x~2 15/16]	10
S4	4,2x50mm [~3/16x~1 15/16]	30
S2	3x40mm [~1/8x~1 9/16]	25

Detail list 4

Exterior construction

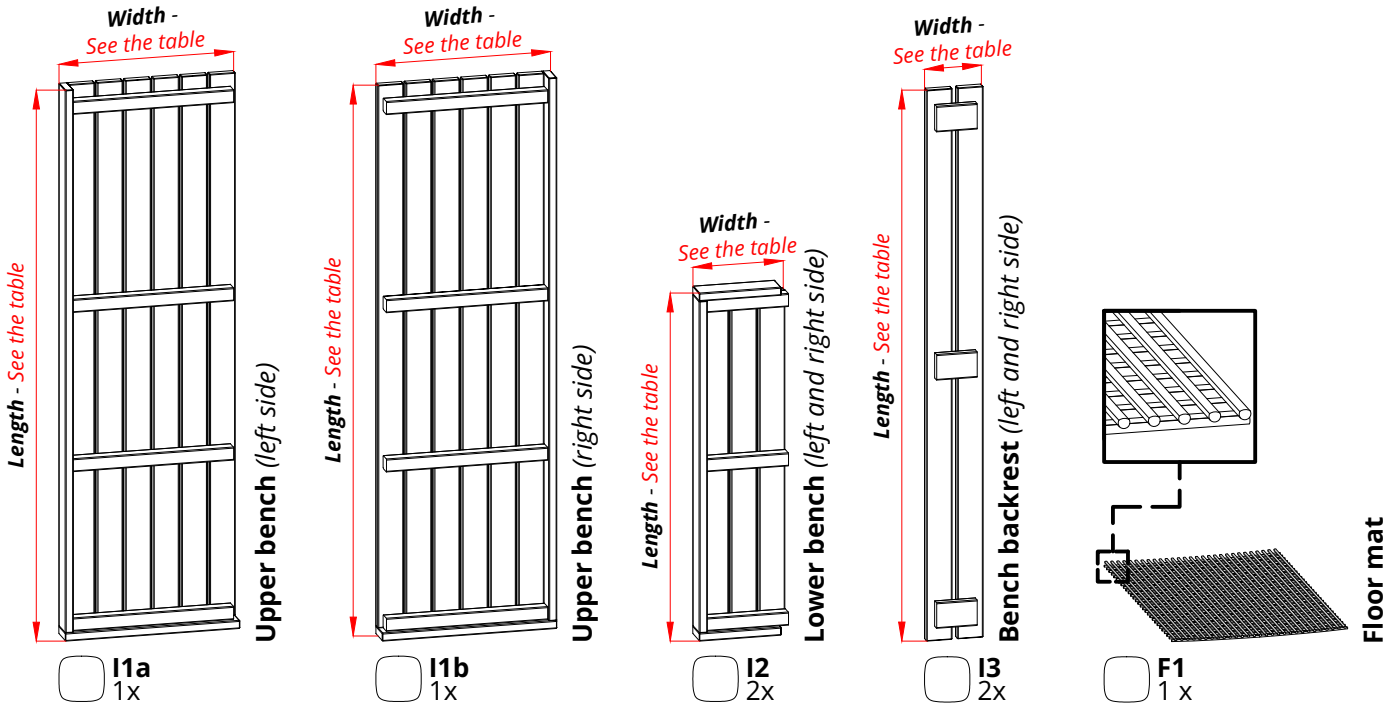

	Lengths	Width	Lengths	Width
I1a	1900 mm	~ 596 mm	~ 6'-2 13/16"	~ 1'-11 7/16"
I1b	1900 mm	~ 596 mm	~ 6'-2 13/16"	~ 1'-11 7/16"
I2	1200 mm	~ 308 mm	~ 3'-11 1/4"	~ 1'-0 1/8"
I3	1900 mm	~ 194 mm	~ 6'-2 13/16"	~ 0'-7 5/8"

Detail list 5

Bench assembly

Square wood and Cover boards for the Bench assembly:

Name in manual	K... Square woods and D... Cover boards	Quantity
K90	***Length*** - *See the table*	4
K55	***Length*** - *See the table*	2
K45	***Length*** - *See the table*	6
K30	***Length*** - *See the table*	2
K10	***Length*** - *See the table*	4
D1	***Length*** - *See the table*	4
D2	***Length*** - *See the table*	18

Dimensions and **lengths**		
K90 - Length	900 mm	~ 2'-11 7/16"
K55 - Length	550 mm	~ 1'-9 5/8"
K45 - Length	450 mm	~ 1'-5 11/16"
K30 - Length	300 mm	~ 0'-11 13/16"
K10 - Length	100 mm	~ 0'-3 15/16"
D1 - Length	900 mm	~ 2'-11 7/16"
D2 - Length	450 mm	~ 1'-5 11/16"

Fasteners for the Bench assembl:

Name in manual	Nails and screws / Screw size	Quantity
S7	4,5x80mm [~3/16x~3 1/8] for **Spruce**	25
	4,2x75mm [~3/16x~2 15/16] for **Thermo**	
S5	4,5x60mm [~3/16x~2 3/8] for **Spruce**	85
	4,2x55mm [~3/16x~2 3/16] for **Thermo**	
S2	3x40mm [~1/8x~1 9/16]	10
P	Hole plug	10

Detail list 6

Bench assembly

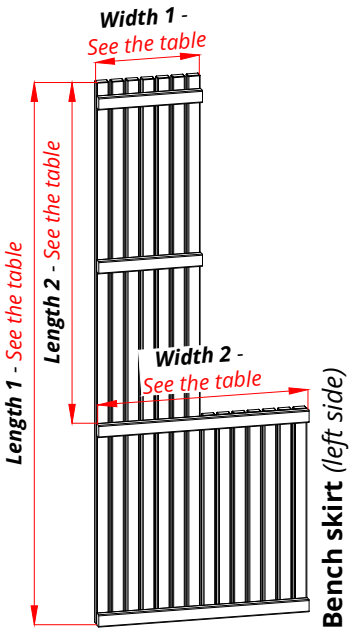

Bench skirt *(left side)*

I4a
1x

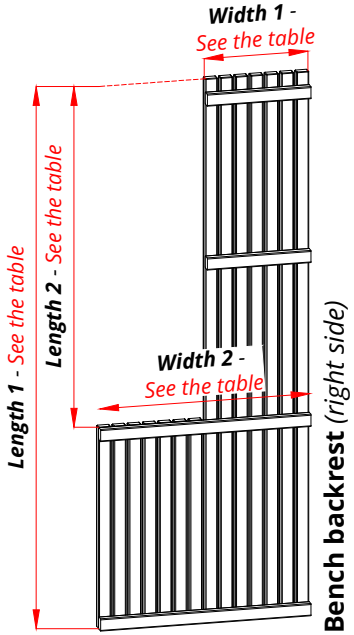

Bench backrest *(right side)*

I4a
1x

Thermal plate
(for a wood-burning heater)

H1
1x

(OPTIONAL) Fasteners for the Bench skirt assembl:

Name in manual	Nails and screws / Screw size	Quantity
S7	4,5x80mm [~3/16x~3 1/8] for **Spruce**	10
	4,2x75mm [~3/16x~2 15/16] for **Thermo**	
S5	4,5x60mm [~3/16x~2 3/8] for **Spruce**	20
	4,2x55mm [~3/16x~2 3/16] for **Thermo**	

Square wood Bench skirt assembly:

Name in manual	K... Square woods and D... Cover boards	Quantity
K50	***Length*** - *See the table*	2

Dimensions and **lengths**		
K50 - Length	550 mm	~ 1'-9 5/8"

	Length 1	Width 1	Lengths 1	Width 1
I4a and I4b	1870 mm	~ 354 mm	~ 6'-1 5/8"	~ 1'-1 15/16"
	Length 2	**Width 2**	**Lengths 2**	**Width 2**
I4a and I4b	1175 mm	~ 718 mm	~ 3'-10 1/4"	~ 2'-4 1/4"

Detail list 7 (Optional)

Bench assembly

Tools needed for sauna construction:

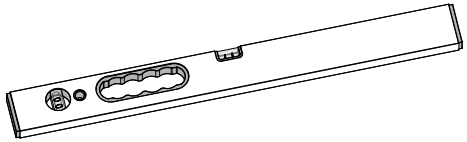

- Spirit level /
  Laser level (best option)

- Tape measure /
  folding rule

- Marking tool - pencil
  (do not use a marker pen)

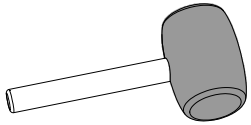

- Rubber hammer

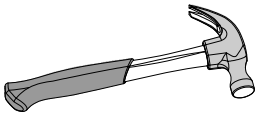

- Hammer

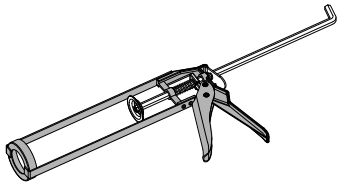

- Sealant gun

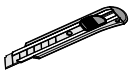

- Utility knife

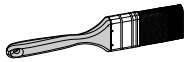

- Paintbrush

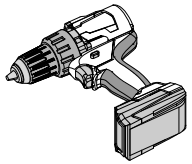

- Cordless drill(s)

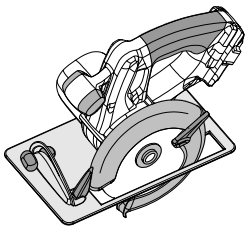

- Circular saw

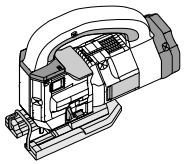

- Jigsaw / hand saw

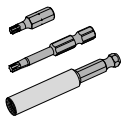

- Screwdriver bits

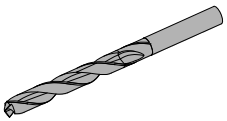

- drill bits (Ø3mm;
  Ø4mm and Ø10-12mm)

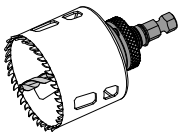

- hole saw (Ø68mm and Ø44mm)
  for cutting a hole for the drain pipe (only necessary if there is no hole in the s center board)!

Additional materials required, if not ordered or included:

- Wood glue /
  assembly adhesive

- Varnish
  (to protect wood from moisture and mold)

- Paint or wood oil
  for wood protection (external surfaces of sauna)

- Bitumen sealant

Tools and materials

Screw(s)*	Name:	Quantity:
	S7	6

*Screw dimensions - exterior construction detail list

NB! use a level

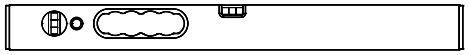

The base of the sauna must be level!

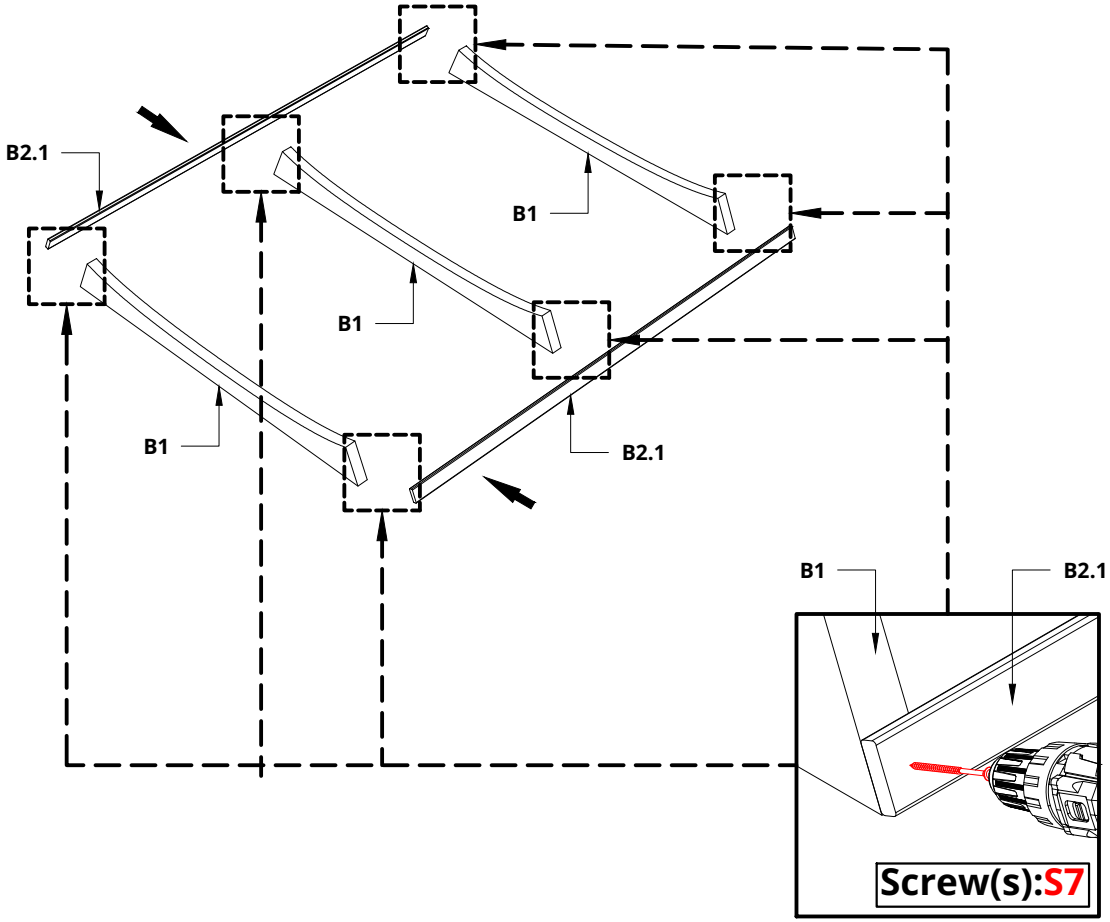

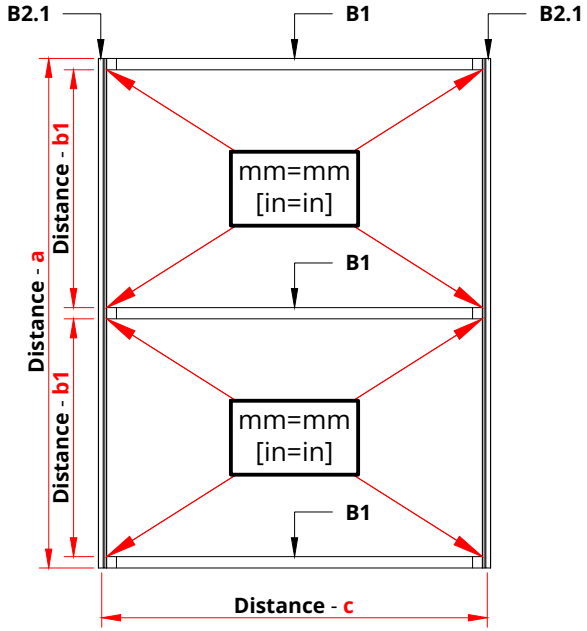

Distance - a	2022 mm	~ 6'-7 5/8"
Distance - b1	~943.5 mm	~ 3'-1 1/8"
Distance - b2	~943.5 mm	~ 3'-1 1/8"
Distance - c	1530 mm	~ 5'-0 1/4"

Screw(s)*	Name:	Quantity:
	S7	6

*Screw dimensions - exterior construction detail list

Please countersink the screw head(s)!

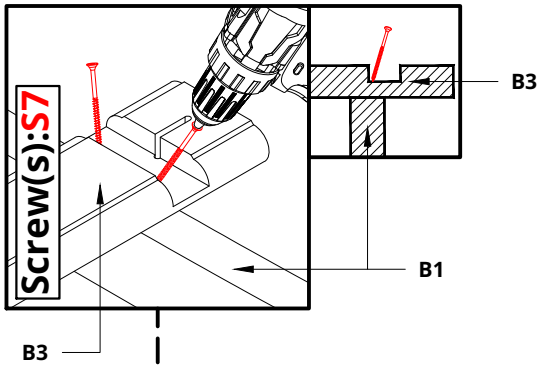

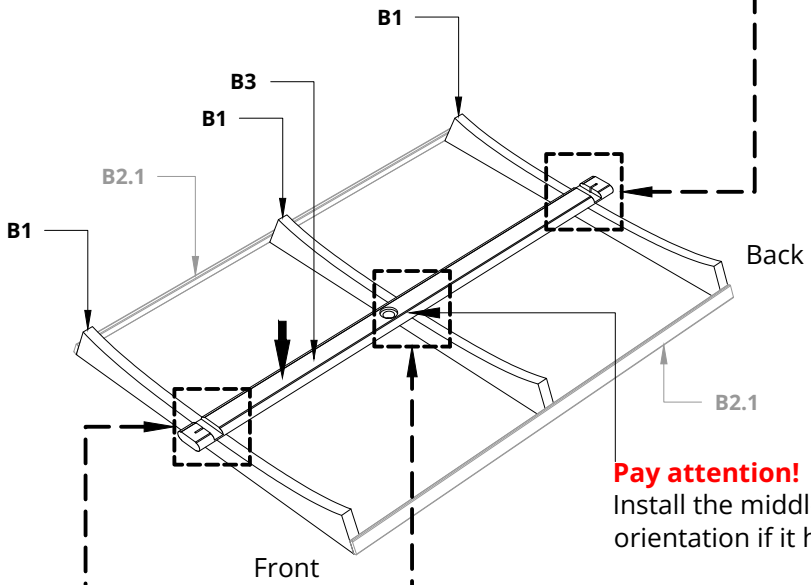

Pay attention!
Install the middle board in the correct orientation if it has a water drain hole.

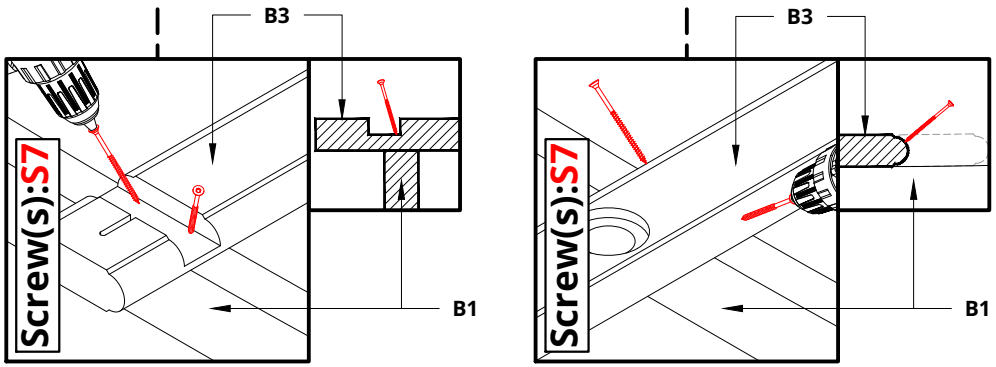

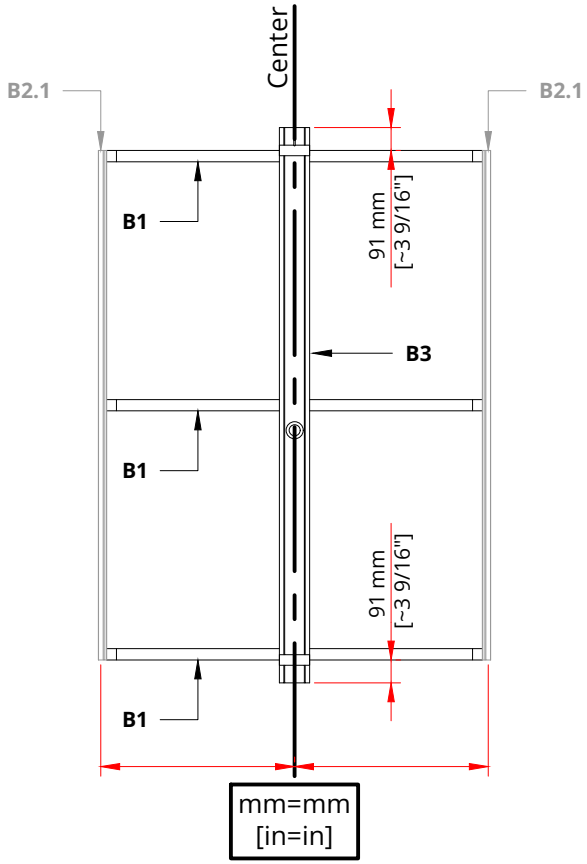

Screw(s)*	Name:	Quantity:
	S7	36

*Screw dimensions - exterior construction detail list

Please countersink the screw head(s)!

Use a rubber mallet to tap the board(s) together and fasten them with screws!

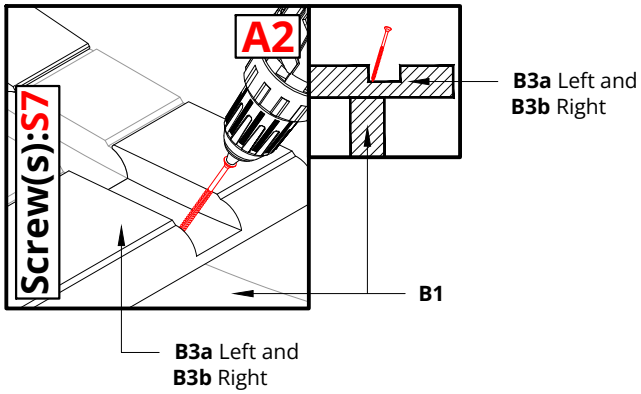

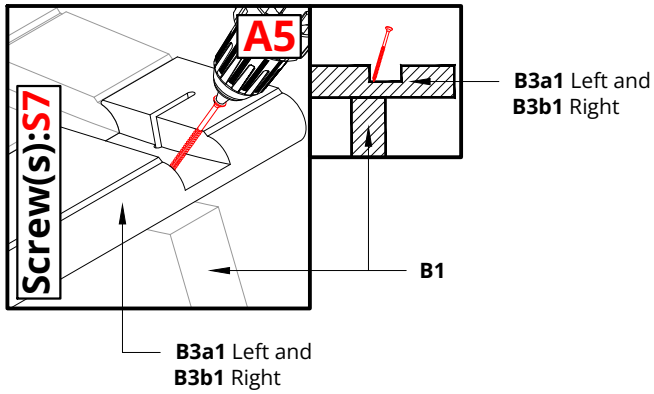

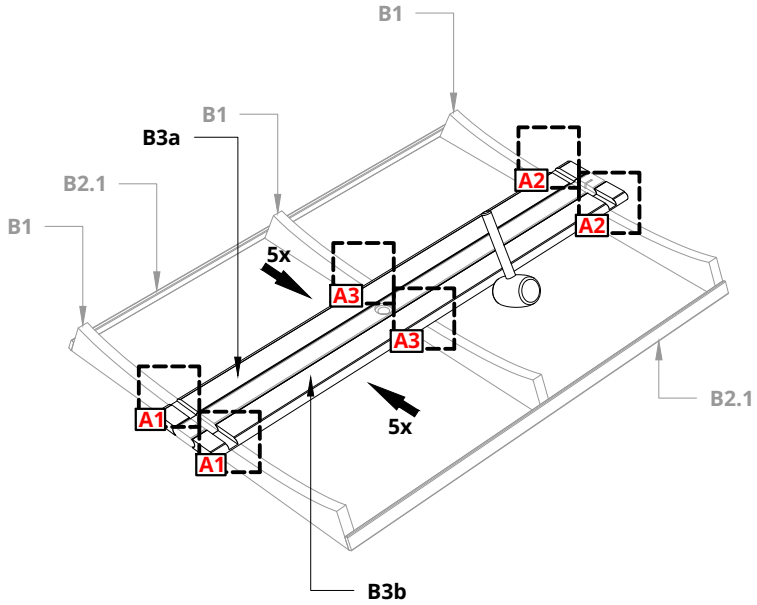

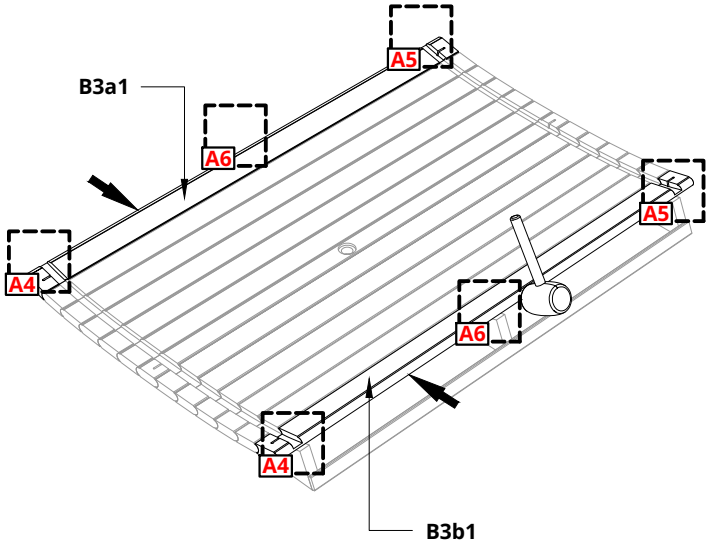

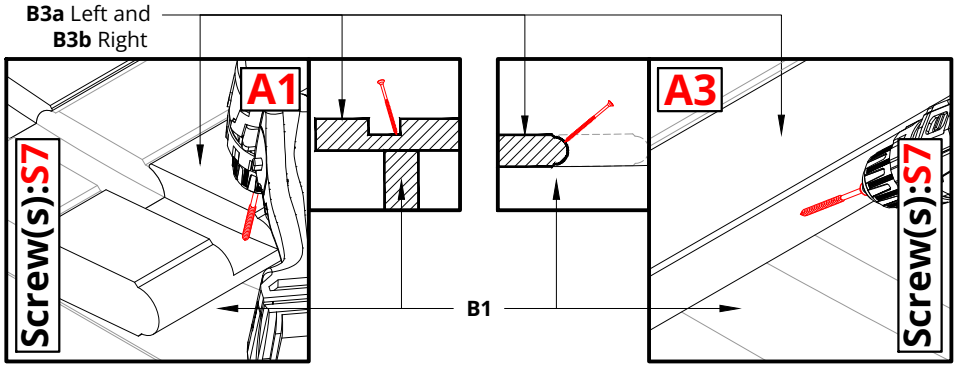

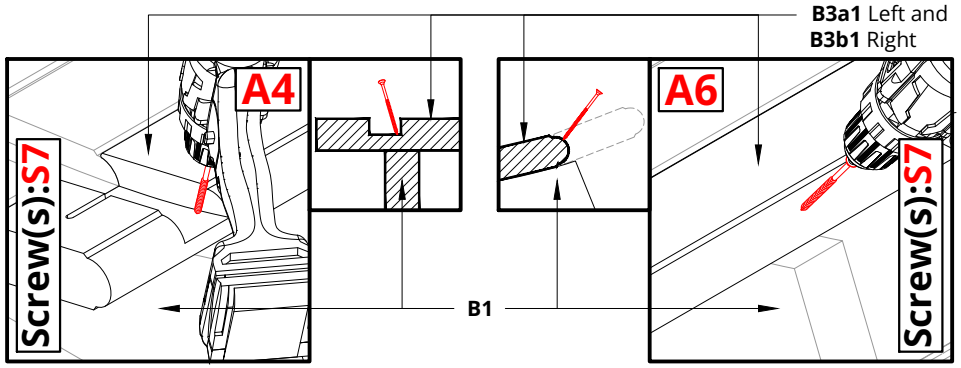

Cut a hole for the drain pipe *(only necessary if there is no hole)*!

Drill 10 - 12 mm [0'-0 3/8" - 0'-0 1/2"] hole in each board groove!

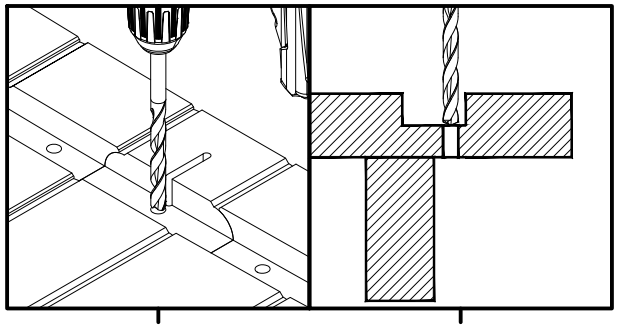

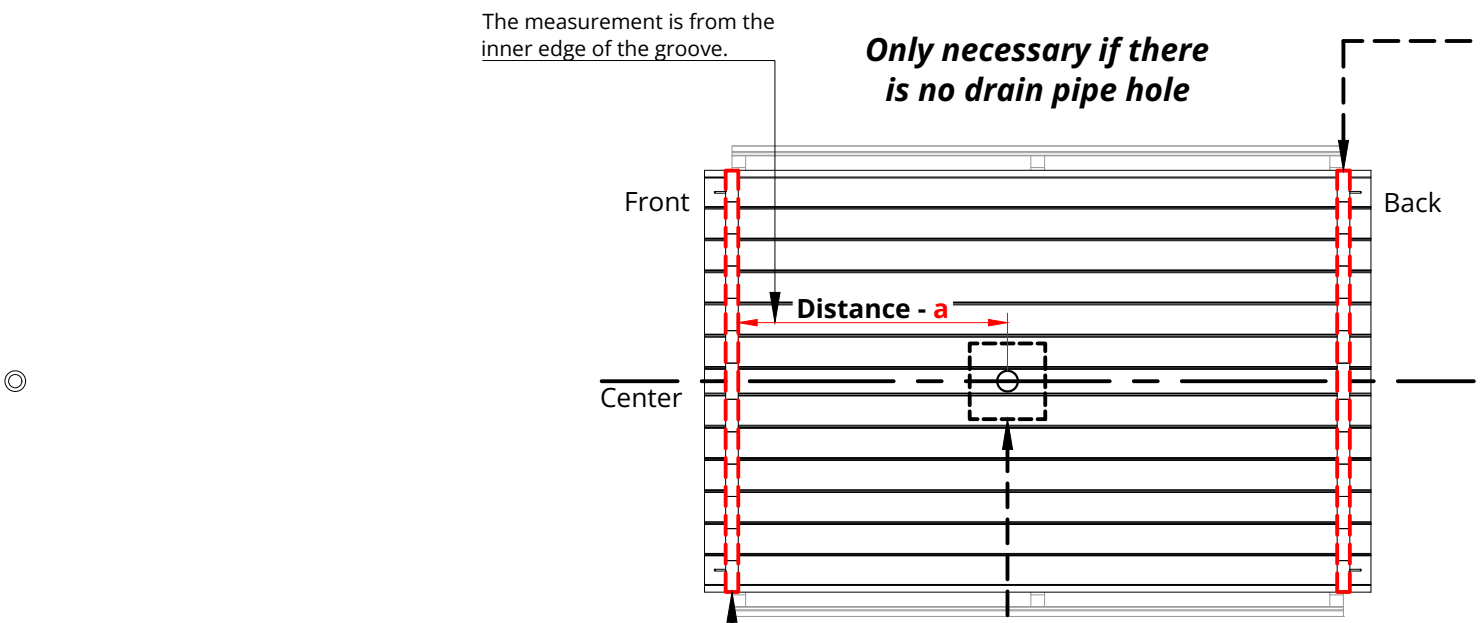

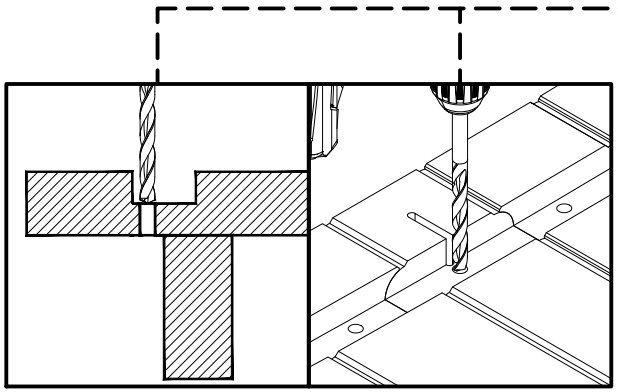

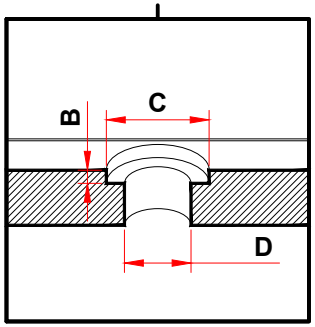

Distance - a	890 mm	~ 2'-11 1/16"
B	~10 mm	~ 0'-0 3/8"
C	68 mm	~ 0'-2 11/16"
D	44 mm	~ 0'-1 3/4"

Clean the groove and floor surfaces from wood waste and other dirt!
Cover the grooves and the floor surfaces (middle) with varnish!*
Use paint or wood oil at the front end and back end of the board(s)!*
** Follow the manufacturer's instructions!*

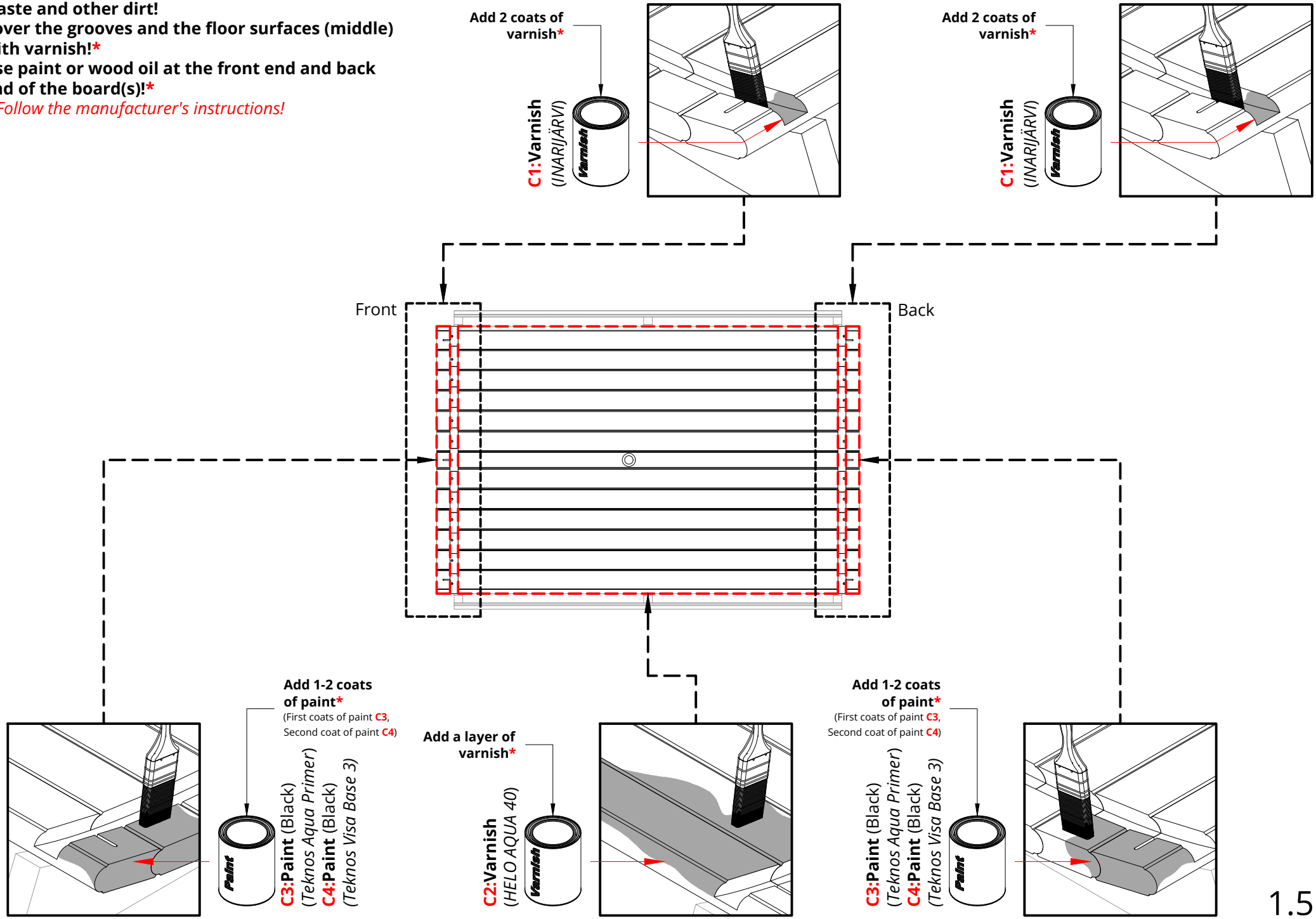

Screw(s)*	Name:	Quantity:
	S7	2

*Screw dimensions - exterior construction detail list

Lift the bottom of the sauna up on one side and install some aids!
Clean the bottom surface!
Cover the surface with paint or wood oil!**
Install a piece of drain pipe V1!
Install the rubber seal R1!
Remove boards B2.1!
*** Follow the manufacturer's instructions!*

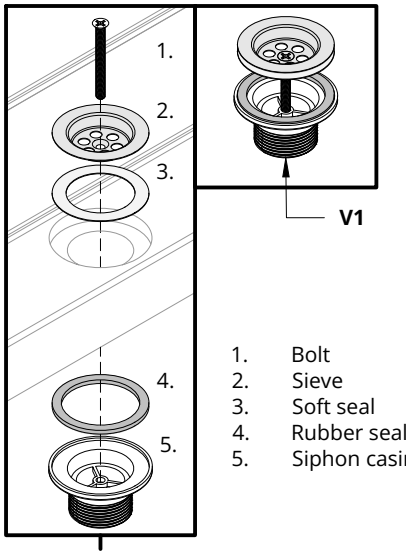

1. Bolt
2. Sieve
3. Soft seal
4. Rubber seal
5. Siphon casing

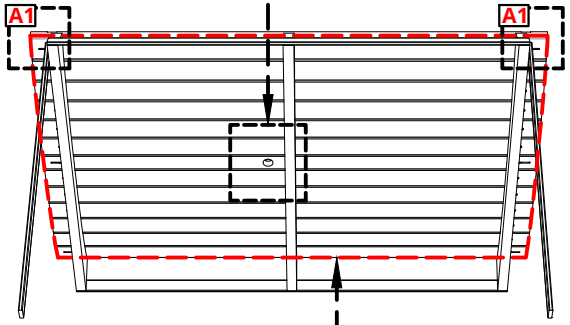

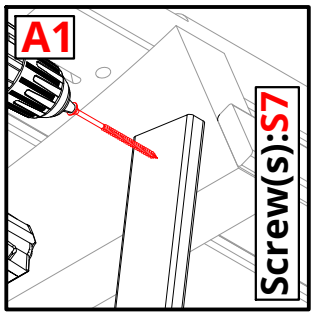

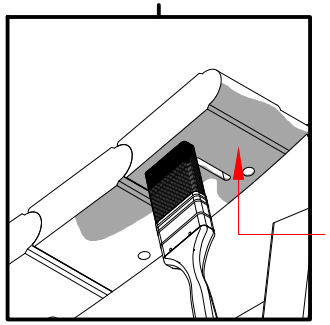

Add 1-2 coats of paint**
(First coats of paint **C3**,
Second coat of paint **C4**)

C3:Paint (Black)
(Teknos Aqua Primer)
C4:Paint (Black)
(Teknos Visa Base 3)

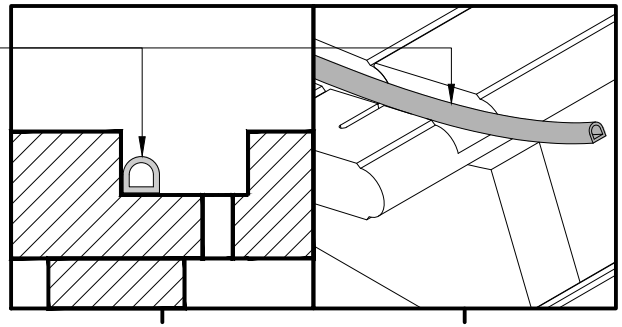

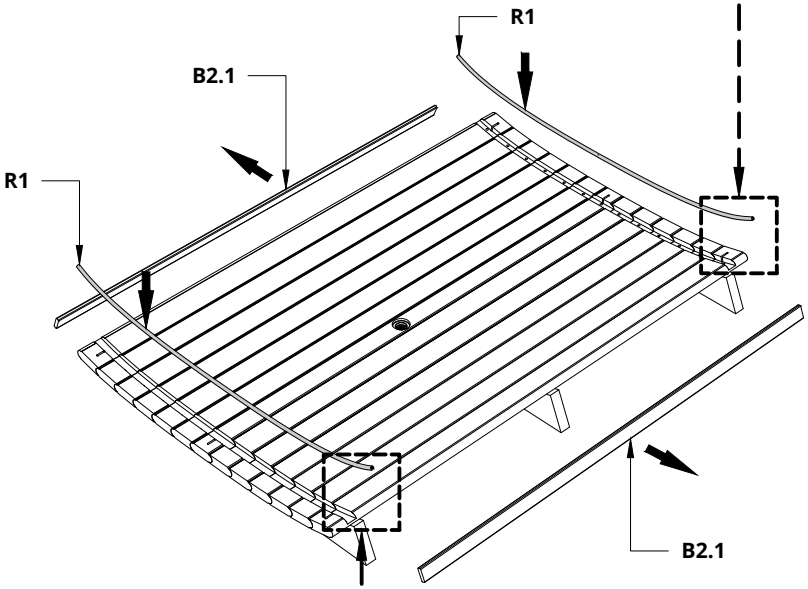

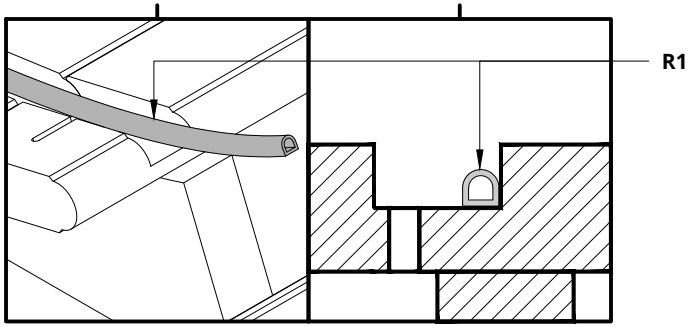

Screw(s)*	Name:	Quantity:
	S7	4
	S5	4

*Screw dimensions - exterior construction detail list

Please countersink the screw head(s)!
Assemble and prepare of the front wall!
Fasten the parts with screws and jigs!
Clean the edge and the outer surface of the front wall from wood waste and other dirt!
Varnish the edge of the wall from the bottom to middle!**
Cover the wall outer surface with paint!**
*** Follow the manufacturer's instructions!*

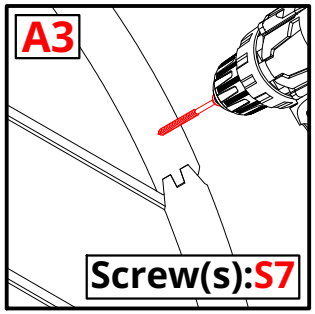

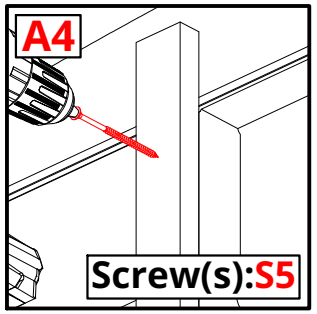

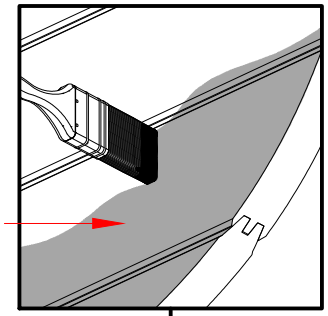

C3:Paint (Black)
(Teknos Aqua Primer)
C4:Paint (Black)
(Teknos Visa Base 3)

Add 1-2 coats of paint**
(First coats of paint **C3**,
Second coat of paint **C4**)

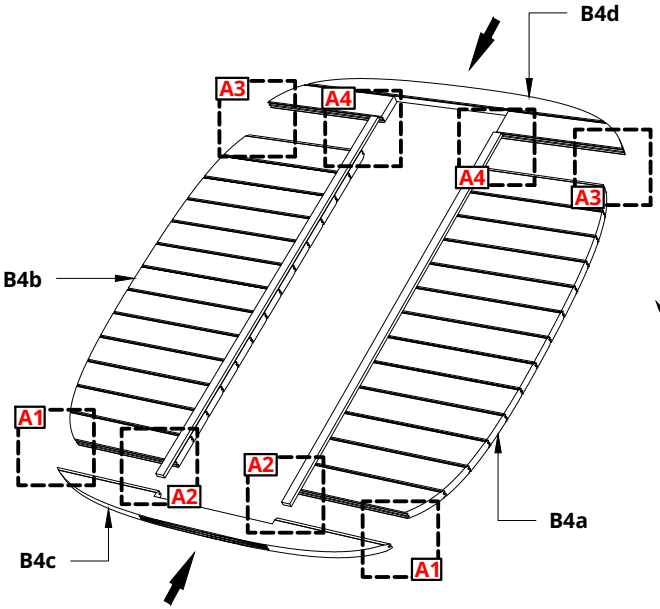

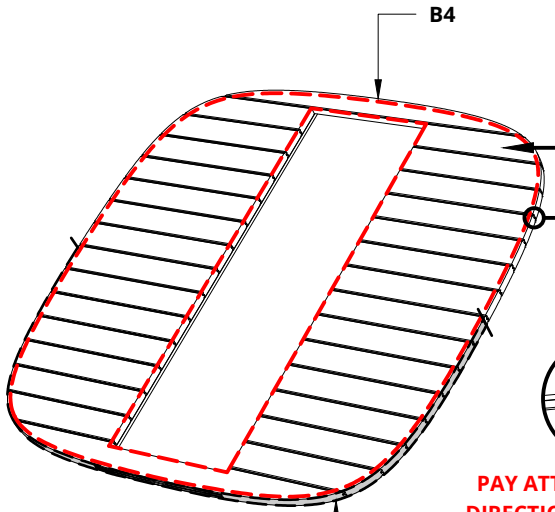

Bottom side

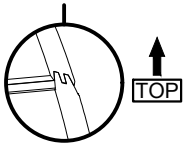

PAY ATTENTION TO THE DIRECTION OF THE WALLS

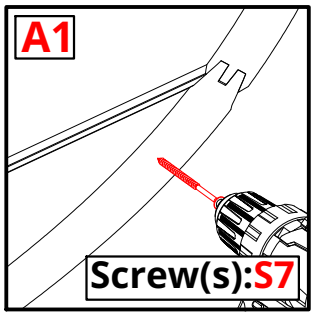

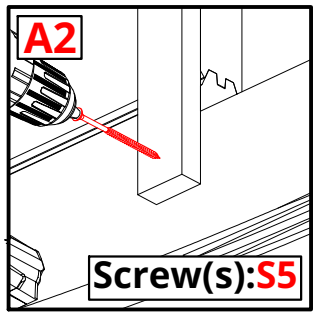

Add 2 coats of varnish**

C1:Varnish
(INARIJÄRVI)

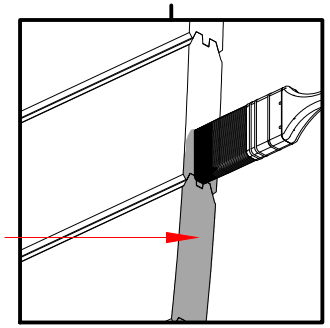

Screw(s)*	Name:	Quantity:
	S5	12

*Screw dimensions - exterior construction detail list

Only necessary for a glass wall version!
Please countersink the screw head(s)!
Assemble and prepare of the front wall!
Remove the door moldings (B7a)!
Use glue between the B4a and B4b!
Fasten the parts with screws and jigs!
Let the glue dry!
Clean the edge of the wall from wood waste and other dirt!
Varnish the edge of the wall from the bottom to middle!**
*** *Follow the manufacturer's instructions!*

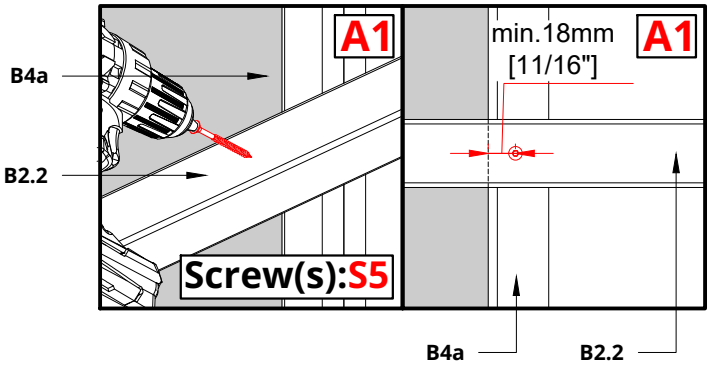

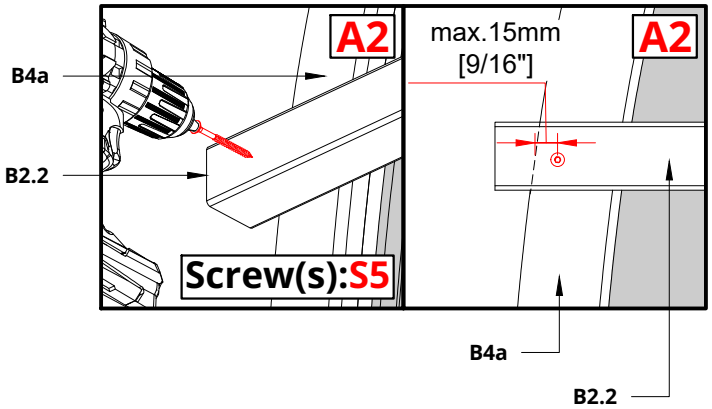

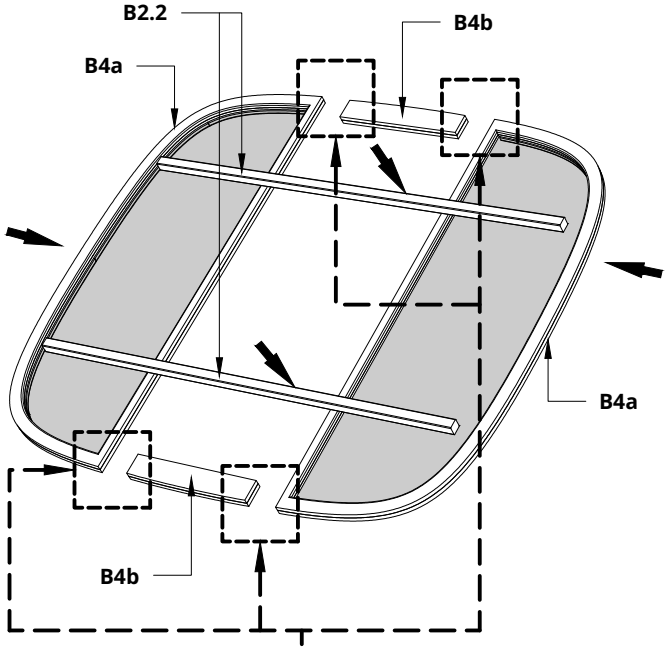

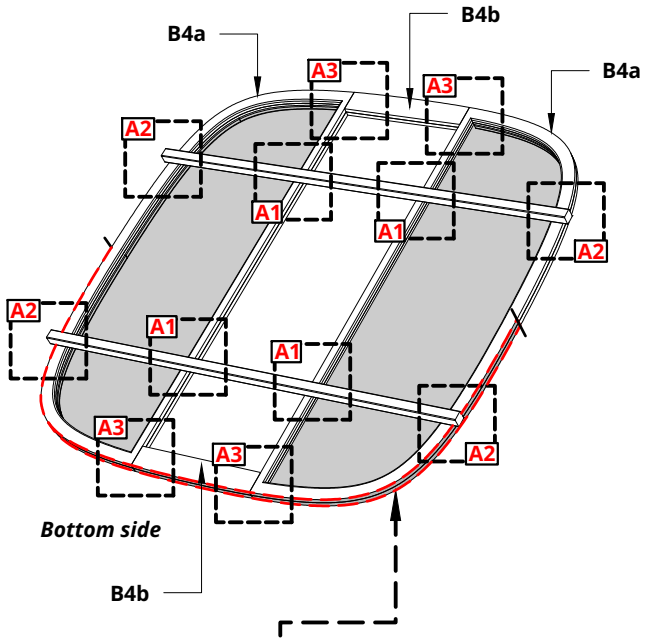

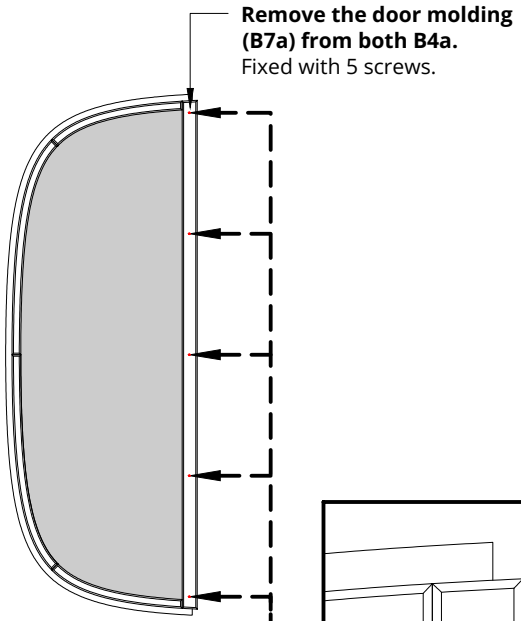

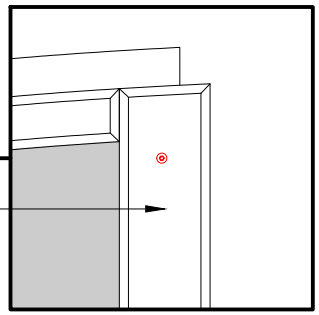

Remove the door molding (B7a) from both B4a
Fixed with 5 screws

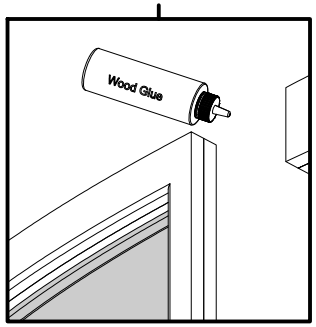

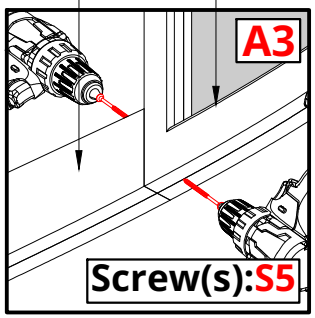

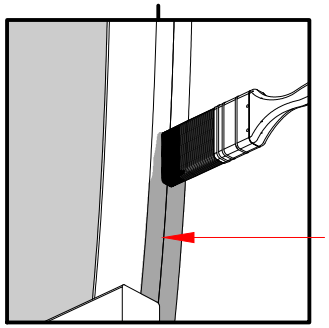

Add 2 coats of varnish**

C1:Varnish
(INARIJÄRVI)

Preparation of the back wall(s)!
Clean the edge of the lower part of the back wall and the outer surface from wood waste and other dirt!
Varnish the lower edge of the back wall from the bottom to middle!*
Cover the lower part (and upper part) of the back wall outer surface with paint!***
** Follow the manufacturer's instructions!*
*** Only on the wooden back wall*

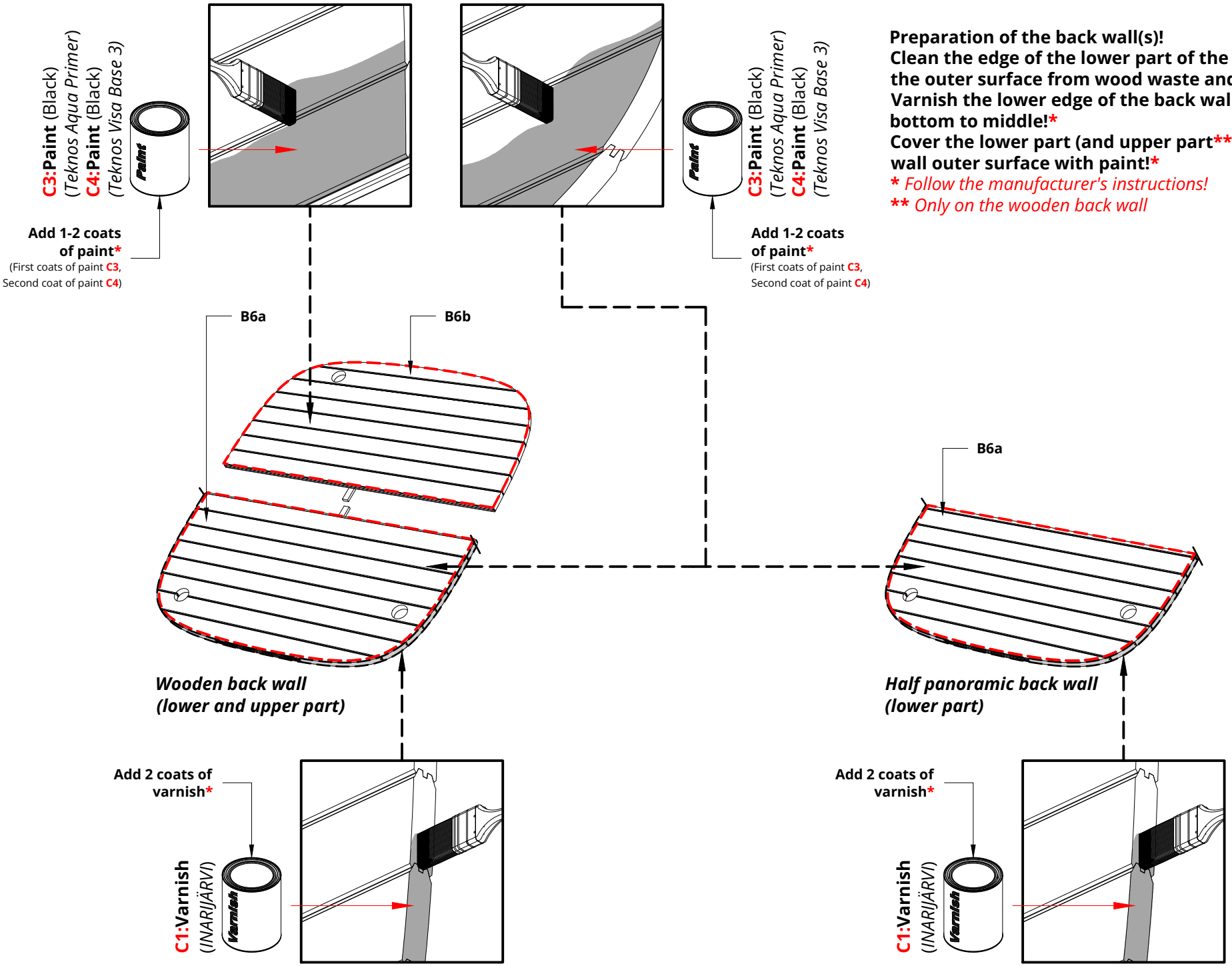

Preparation for side wall boards.

Before doing the processes, clean the sidewall boards from wood waste and other dirt!

** Follow the manufacturer's instructions!*

Boards	First ones		The following ones			
	B3a	B3b	B3a	B3b	B3a	B3b
Process 1	✓	✓	✗	✗	✗	✗
Process 2	✓	✓	✓	✓	✓	✓
Process 3	✓	✓	✓	✓	✗	✗
Process 4	✓	✓	✗	✗	✗	✗
Label them	1L	1R	2L	2R	3L	3R
Quantity	5	5	8	8	19	19

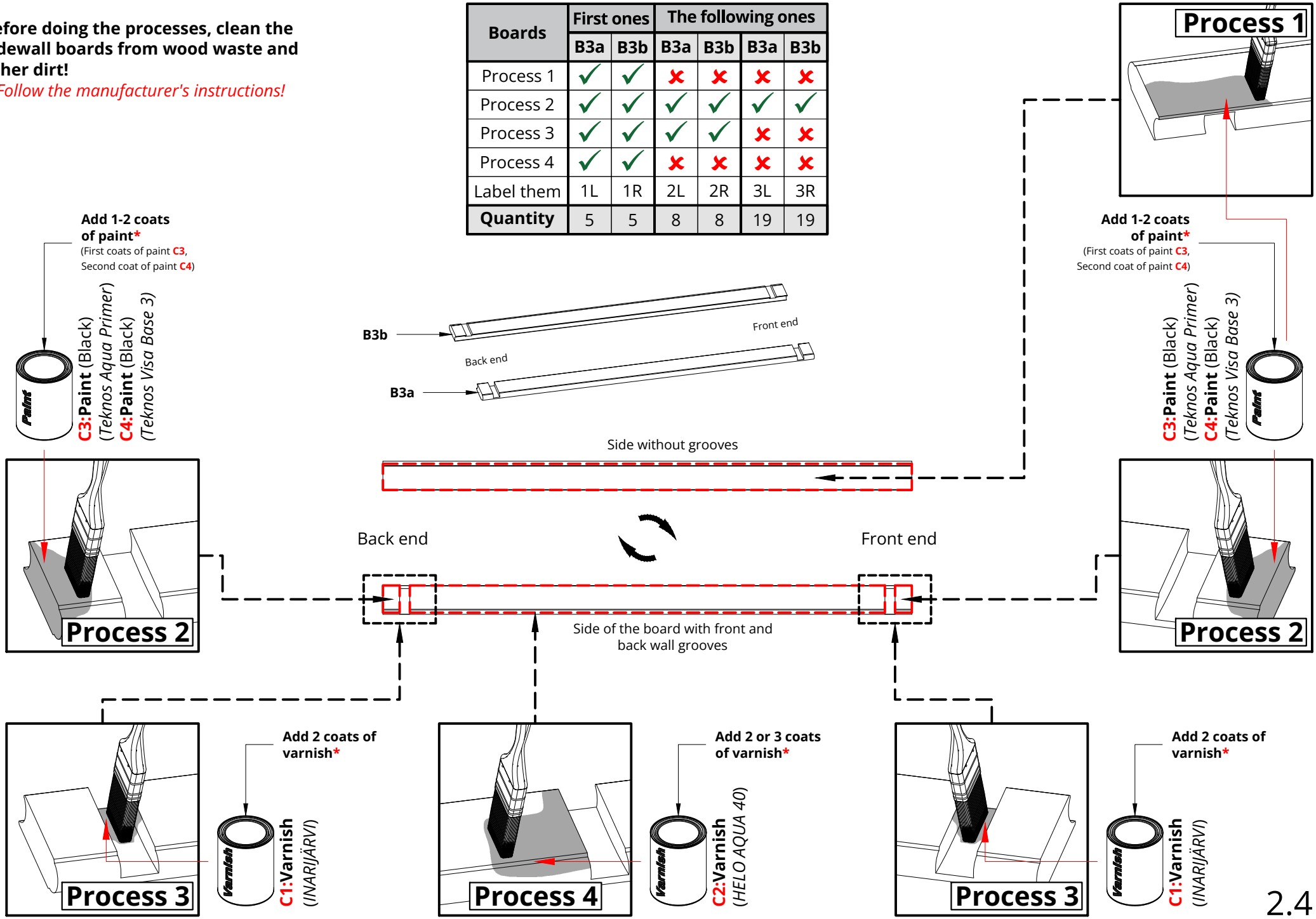

Screw(s)*	Name:	Quantity:
	S5	8

*Screw dimensions - exterior construction detail list

NB! use a level

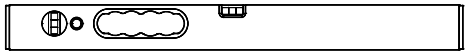

The same steps apply to the bottom part of the panoramic back wall

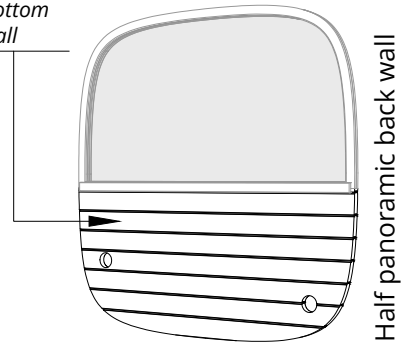

Please countersink the screw head(s)!
Make sure that the walls are centered in relation to the bottom!
Install safety boards on walls, use boards B3a and B3b, that are labeled as 3L and 3R!
Remove the back wall connection strip(s)!
*** Depends on the choice of sauna wall!*

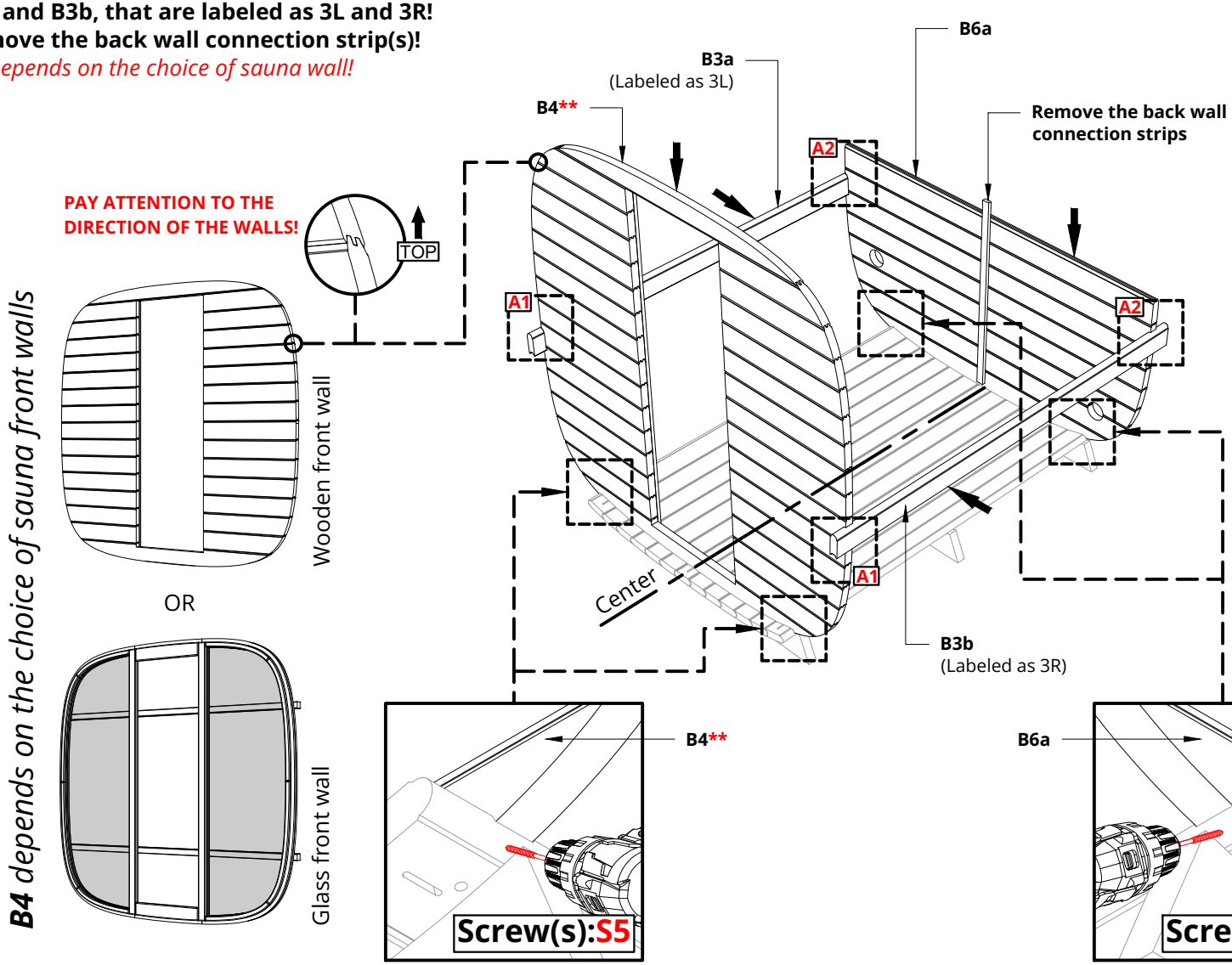

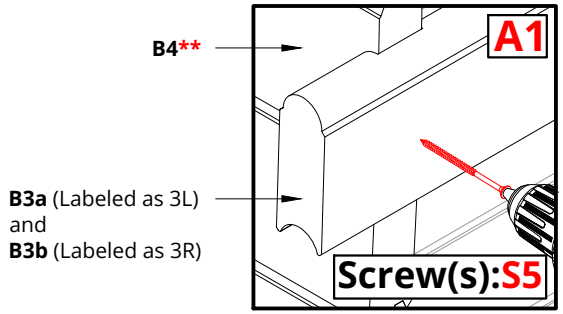

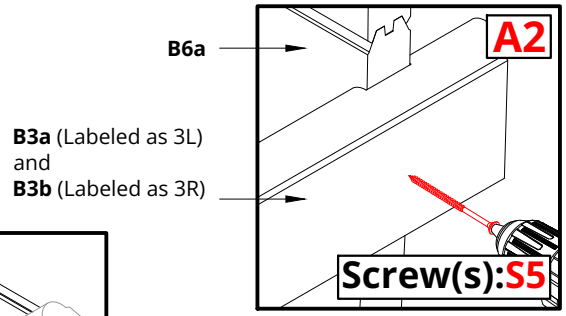

Screw(s)*	Name:	Quantity:
	S7	2
	S5	4

*Screw dimensions - exterior construction detail list

Please countersink the screw head(s)!
Install the upper part of the back wall B6b and the upper safety board(s)!
Remove the back wall connection strip(s)!
Panorama construction instructions are on the next page!
*** Depends on the choice of sauna wall!*

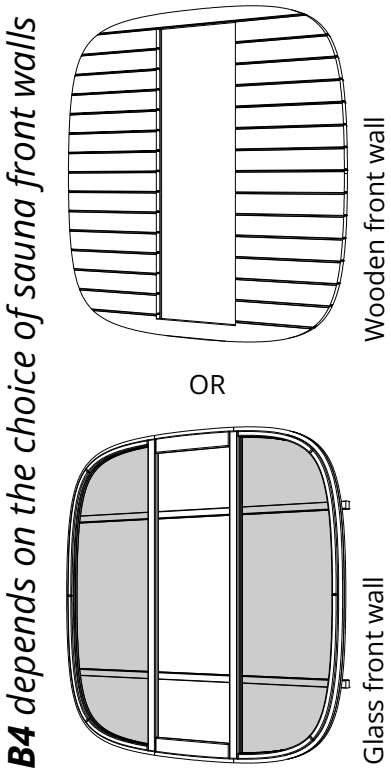

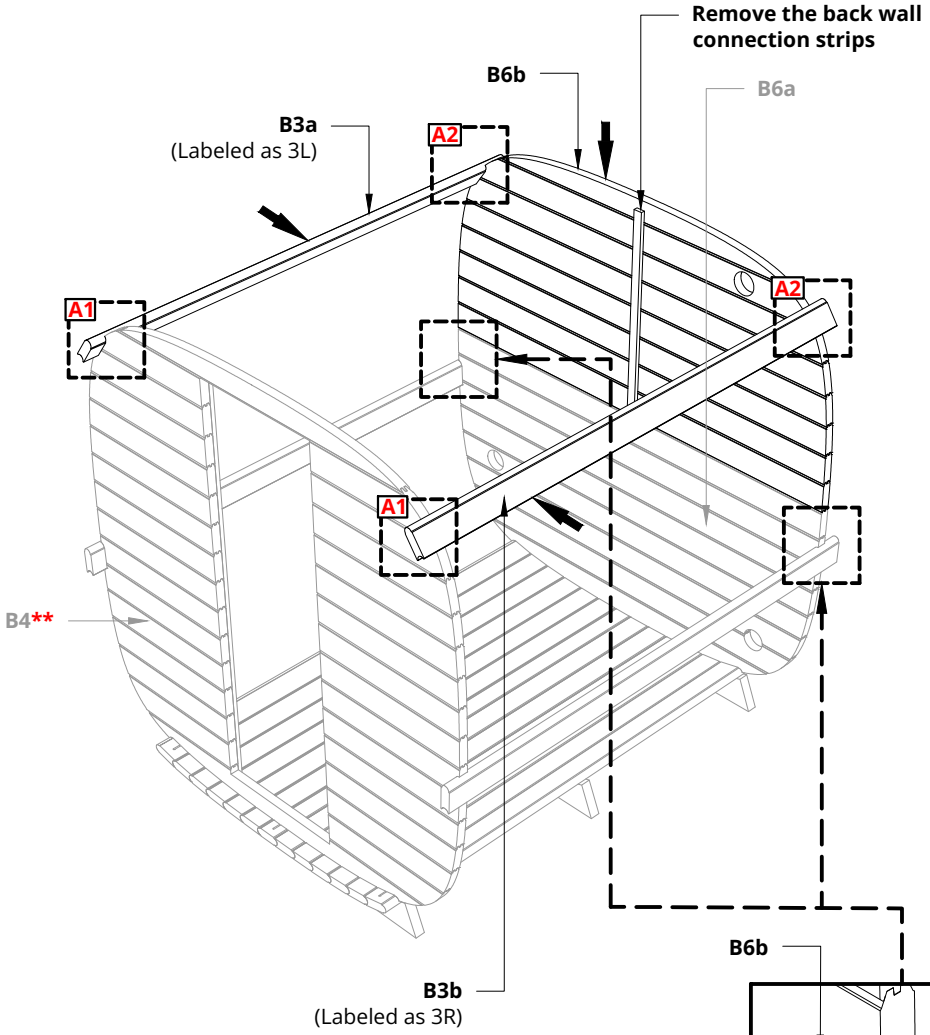

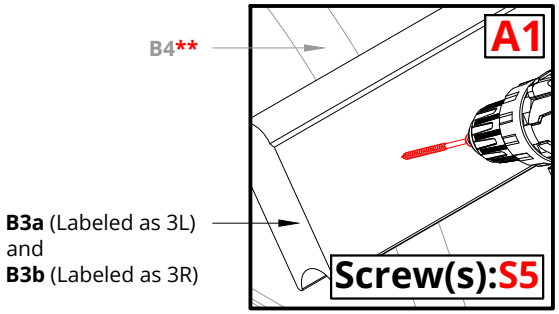

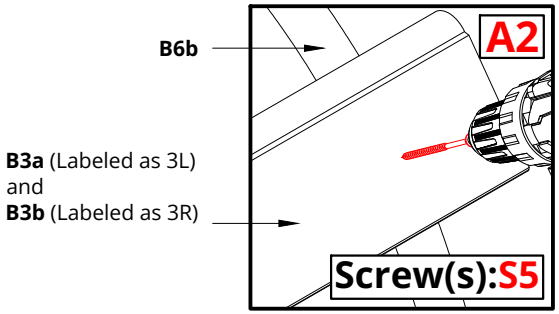

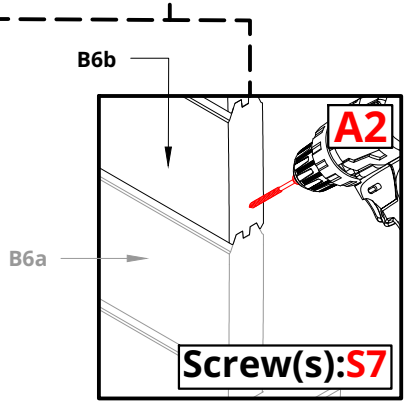

Screw(s)*	Name:	Quantity:
	S7	2
	S5	4
	S2	5

*Screw dimensions - exterior construction detail list

NB! use a level

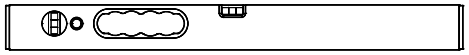

Only necessary for a panorama back wall version!
Install the upper part of the back wall B6b and the upper safety board(s)!
Install a panoramic wall molding!
*** Depends on the choice of sauna wall!*

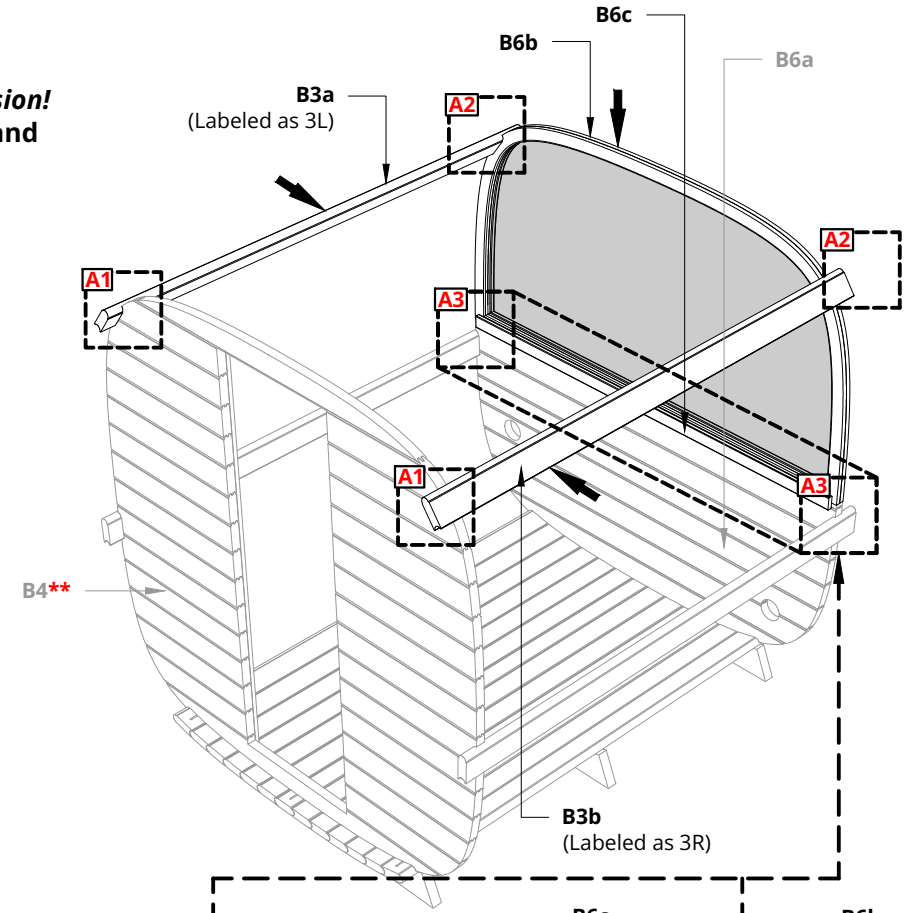

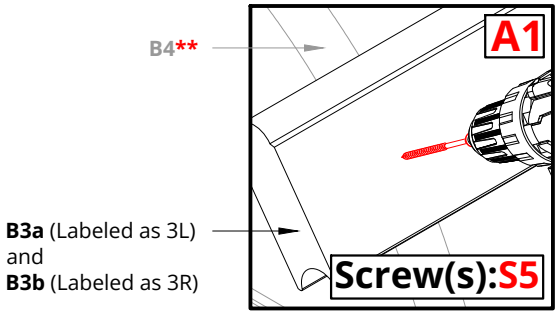

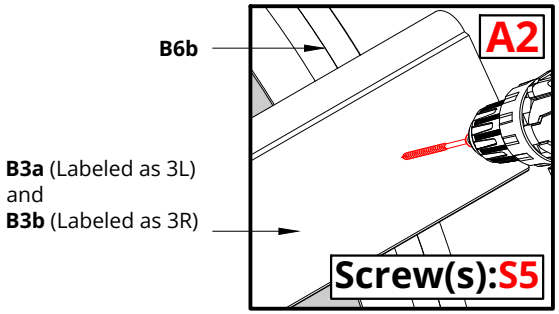

***B4** depends on the choice of sauna front walls*

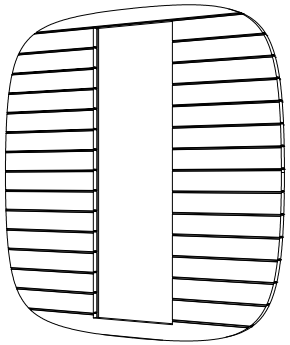

Wooden front wall

OR

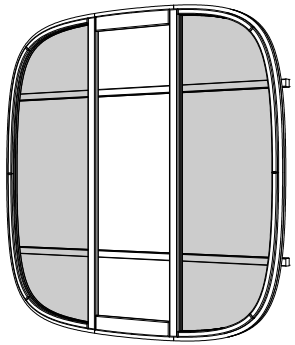

Glass front wall

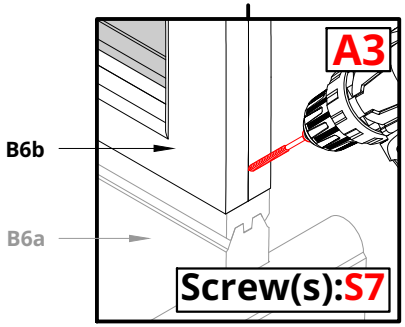

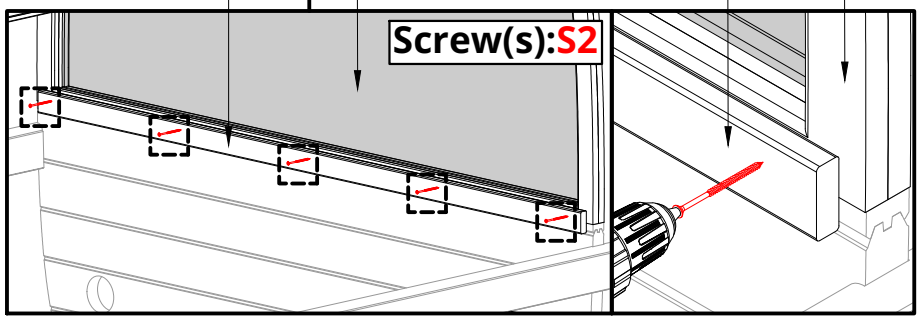

Screw(s)*	Name:	Quantity:
	S5	104

*Screw dimensions - exterior construction detail list

Please countersink the screw head(s)!
Use a rubber mallet to tap the boards into place!
Please do not screw the screws in on the last whole boards immediately!
*** Depends on the choice of sauna wall!*
**** For glass wall only!*

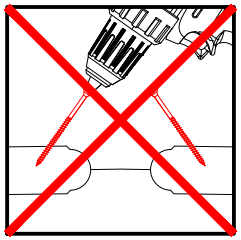

***B3a** left and **B3b** right*

layout of labeled boards

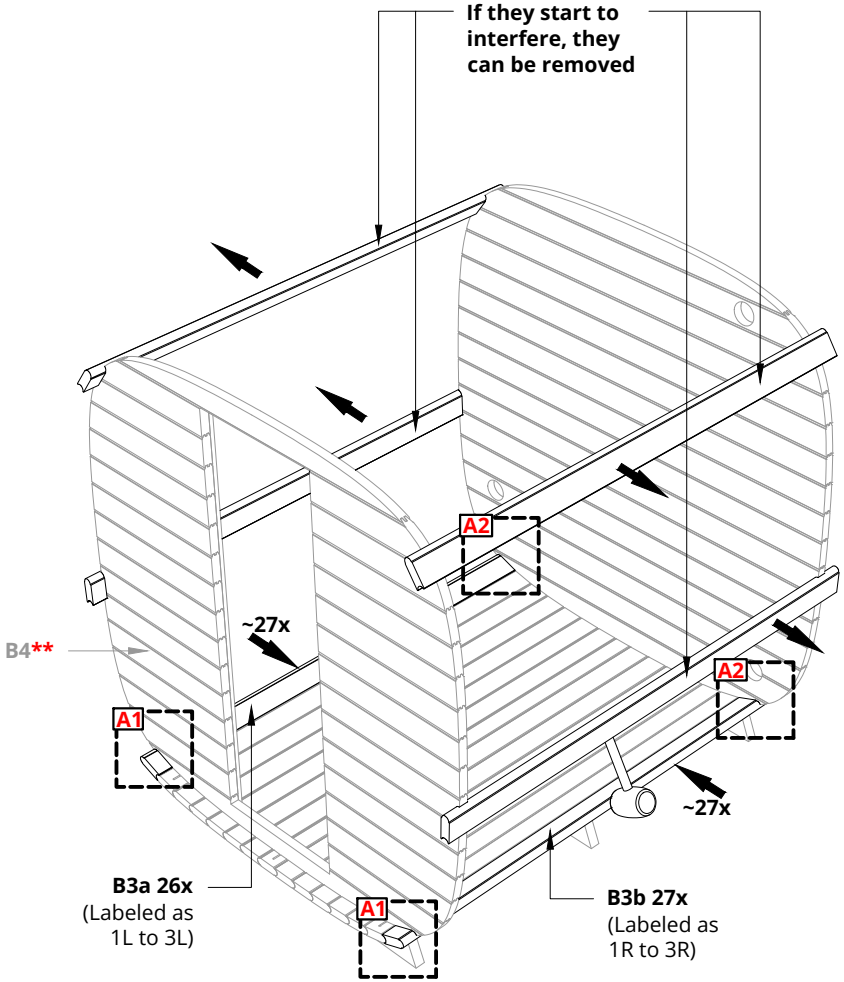

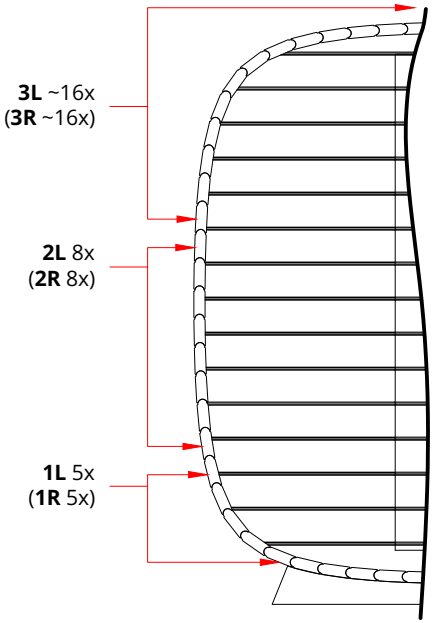

***B4** depends on the choice of sauna front walls*

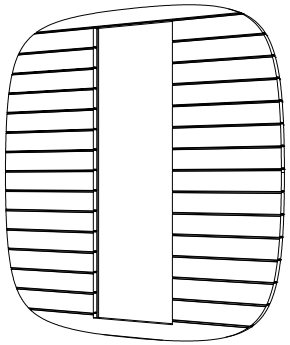

Wooden front wall

OR

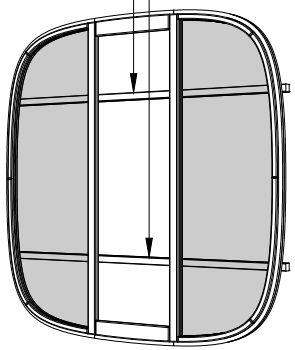

*** If they start to interfere, they can be removed

Glass front wall

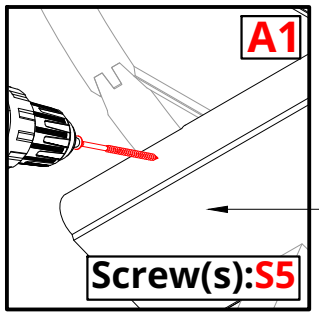

B3a left
(Labeled as 1L to 3L)
B3b right
(Labeled as 1R to 3R)

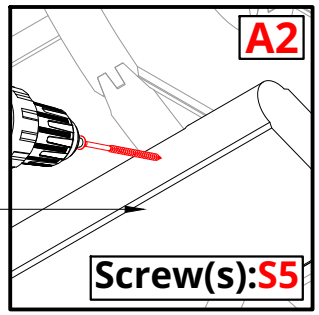

Measure the gap front and back, the dimensions can be different!

Divide the measurement by two and transfer the measurements to the last two boards. Connect the dimensions on the board with a line.

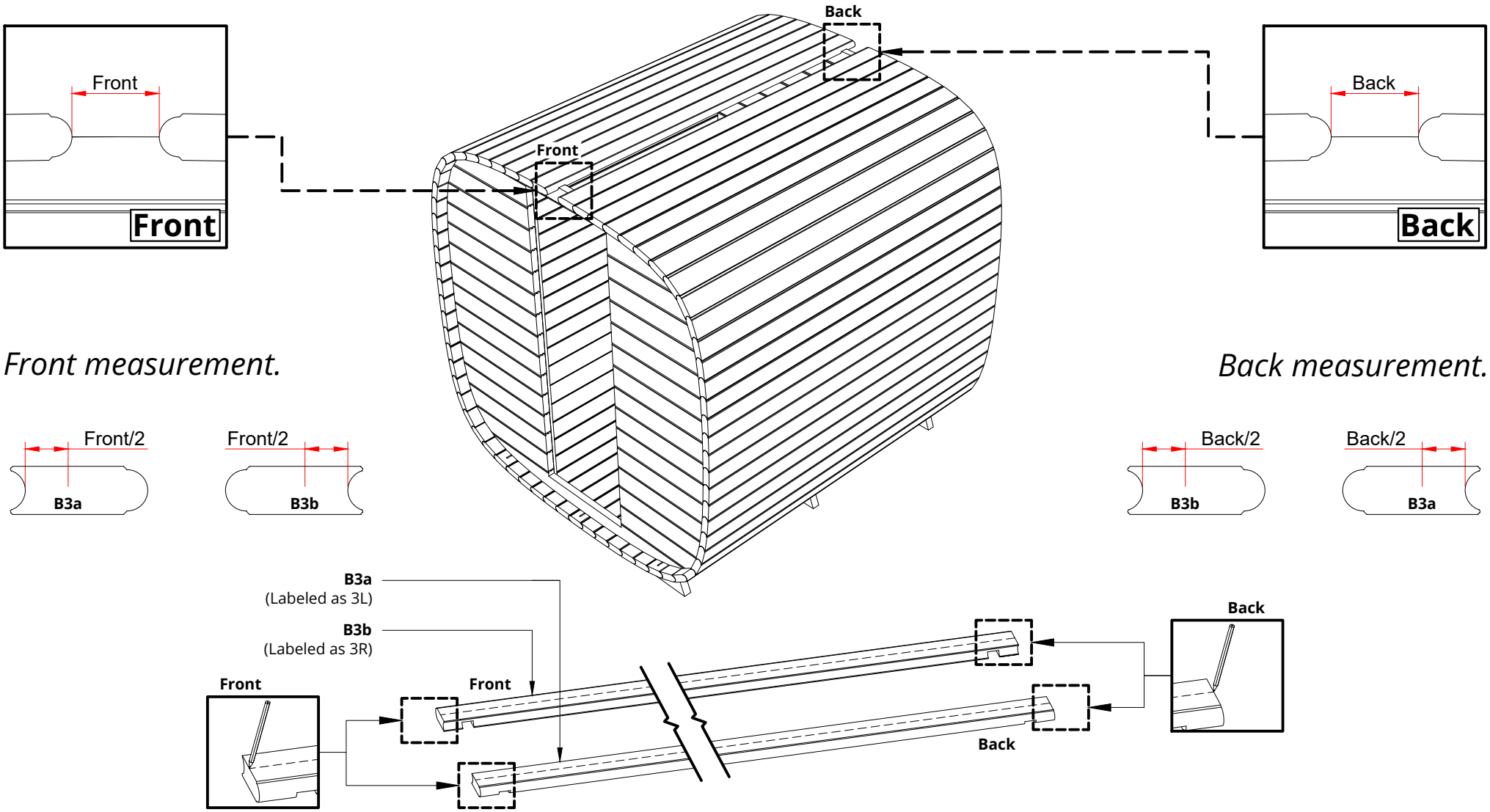

Screw(s)*	Name:	Quantity:
	S2...S7	7
	S5	6

*Screw dimensions - exterior construction detail list

Please countersink the screw head(s)!
Prepare the last board!
Use a rubber mallet to tap the boards in to the cap!

Cut along the marked line to cut off these ends. Glue the two cut boards with wood glue and connect them with 7 pieces of **S2...S7** screws ***(the length of the screws depends on the final width of the last two planks cut)***. Wipe off excess glue with a cloth and then use sandpaper to smooth out the gap.

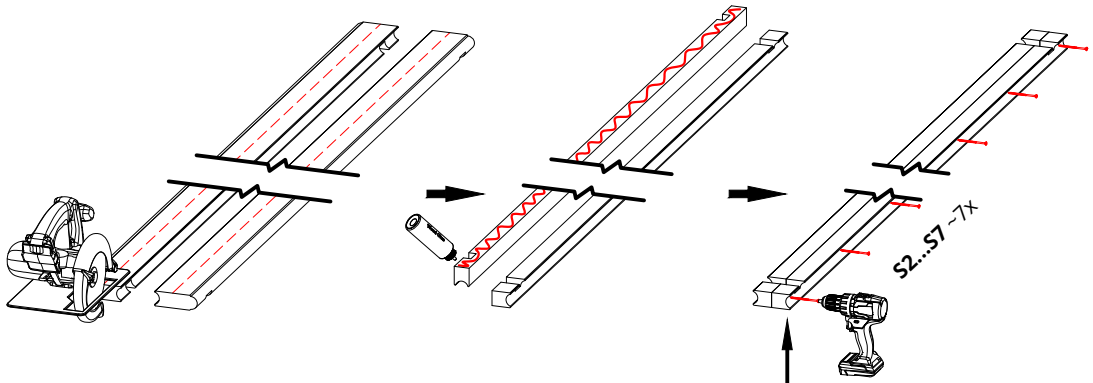

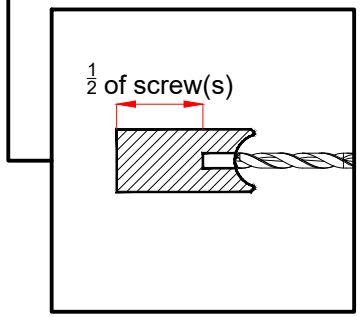

Suggestions!
Drill pockets for screws if the screws do not extend through

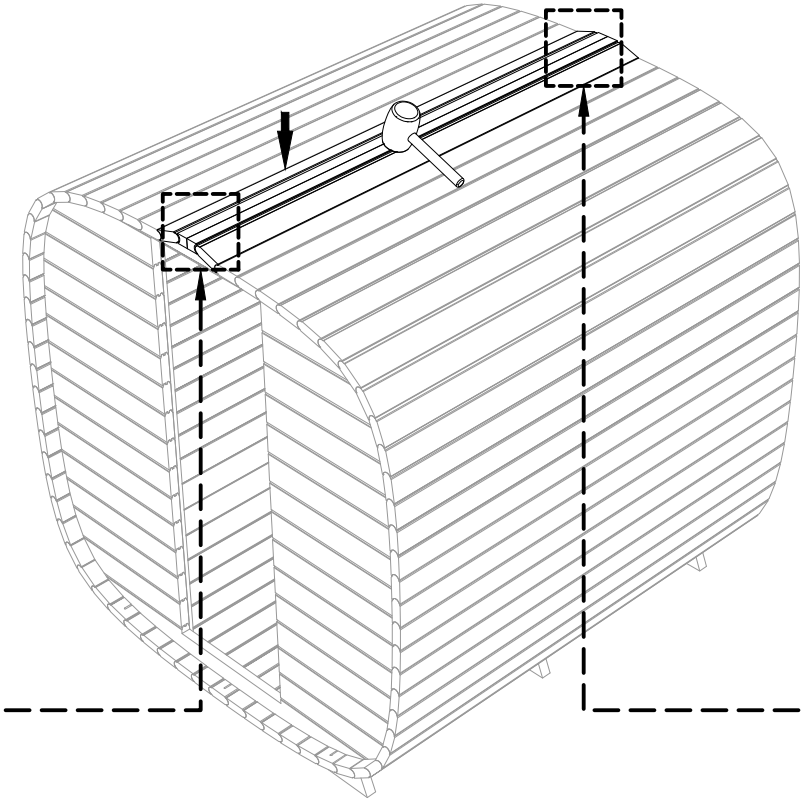

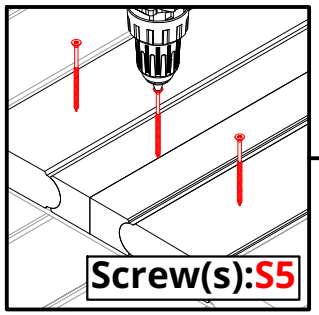

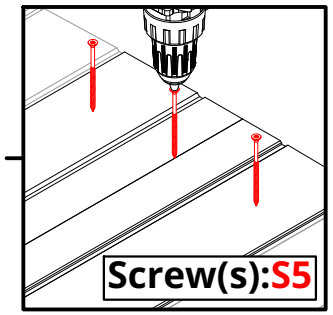

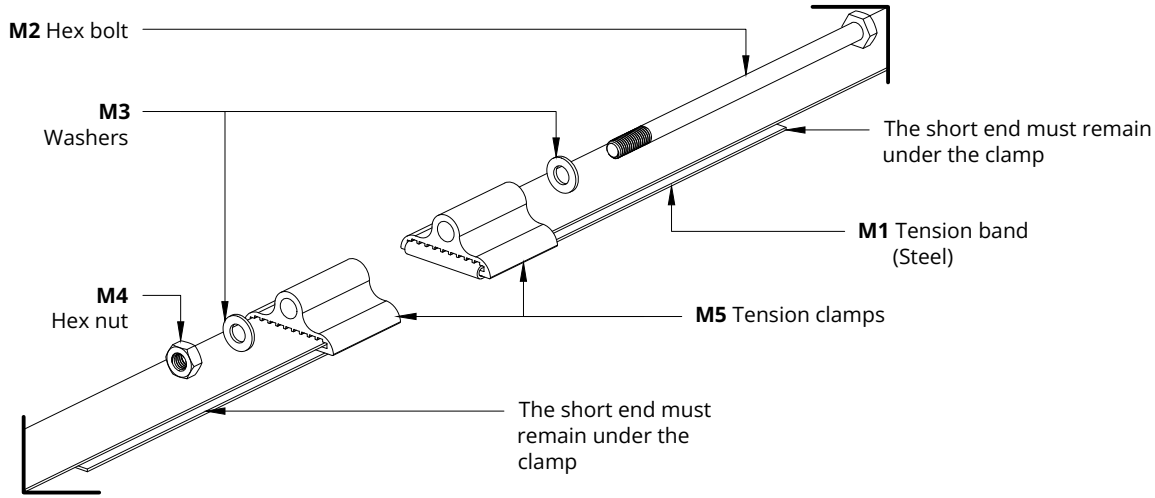

Place the tension bands M1 (Steel band(s)) around the side walls and thread the band(s) into the eyelet as follows (see sketch above).

Hex nuts and bolts must be tightened as long as the boards are stationary in all directions.

The tension band and clamps must be placed as shown in the picture below.

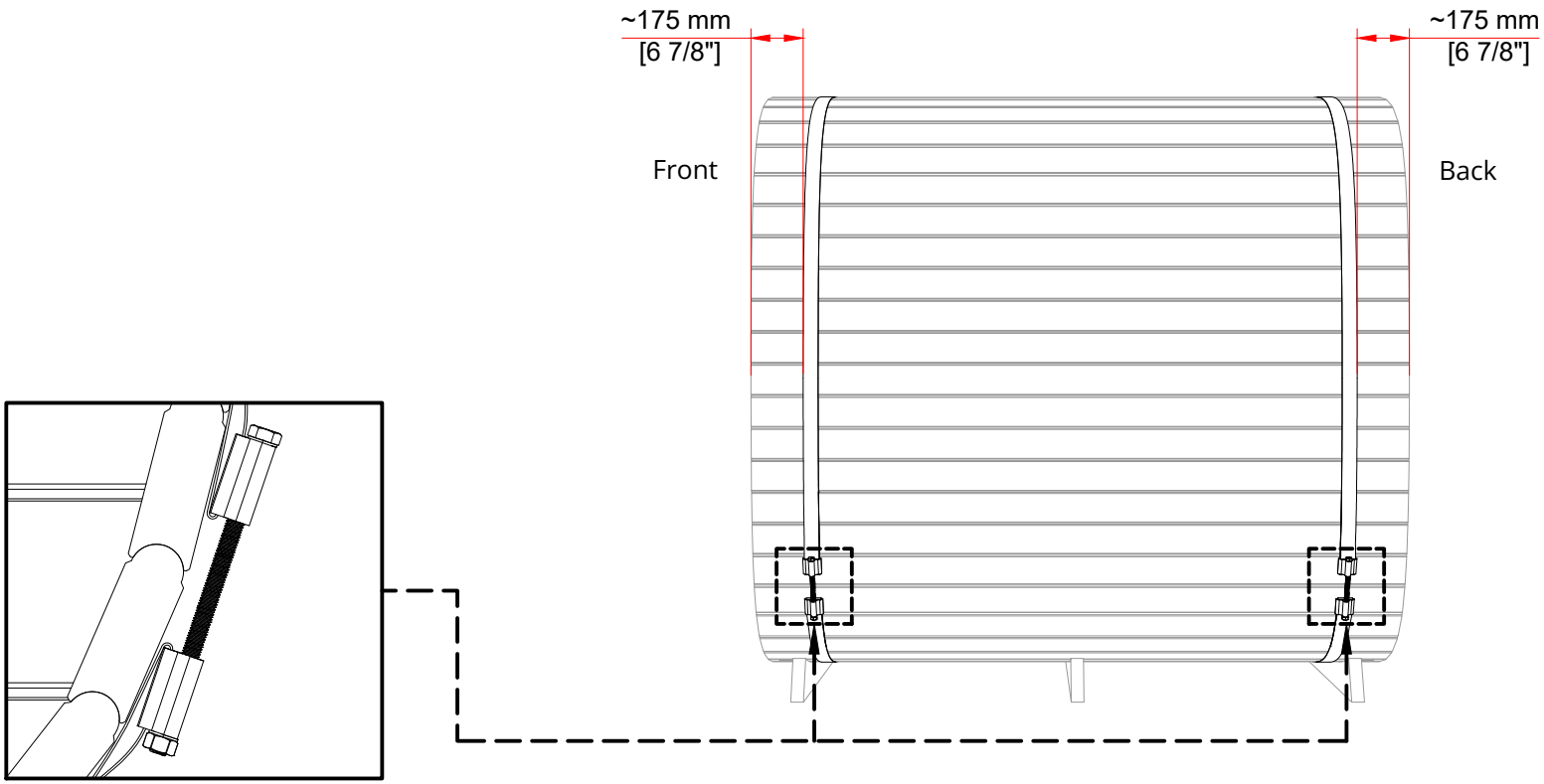

Screw(s)*	Name:	Quantity:
	S1	12

*Screw dimensions - exterior construction detail list

NB! use a level

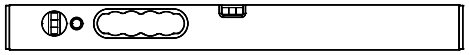

Min. height - a	~1195 mm	~ 3'-11 1/16"
Max. height - b	~1005 mm	~ 3'-3 9/16"

Please countersink the screw head(s)! Height measurements are measured from a straight surface (ground) or from above the sauna!

Install the eaves edge (tin strip) **on the left and right!**

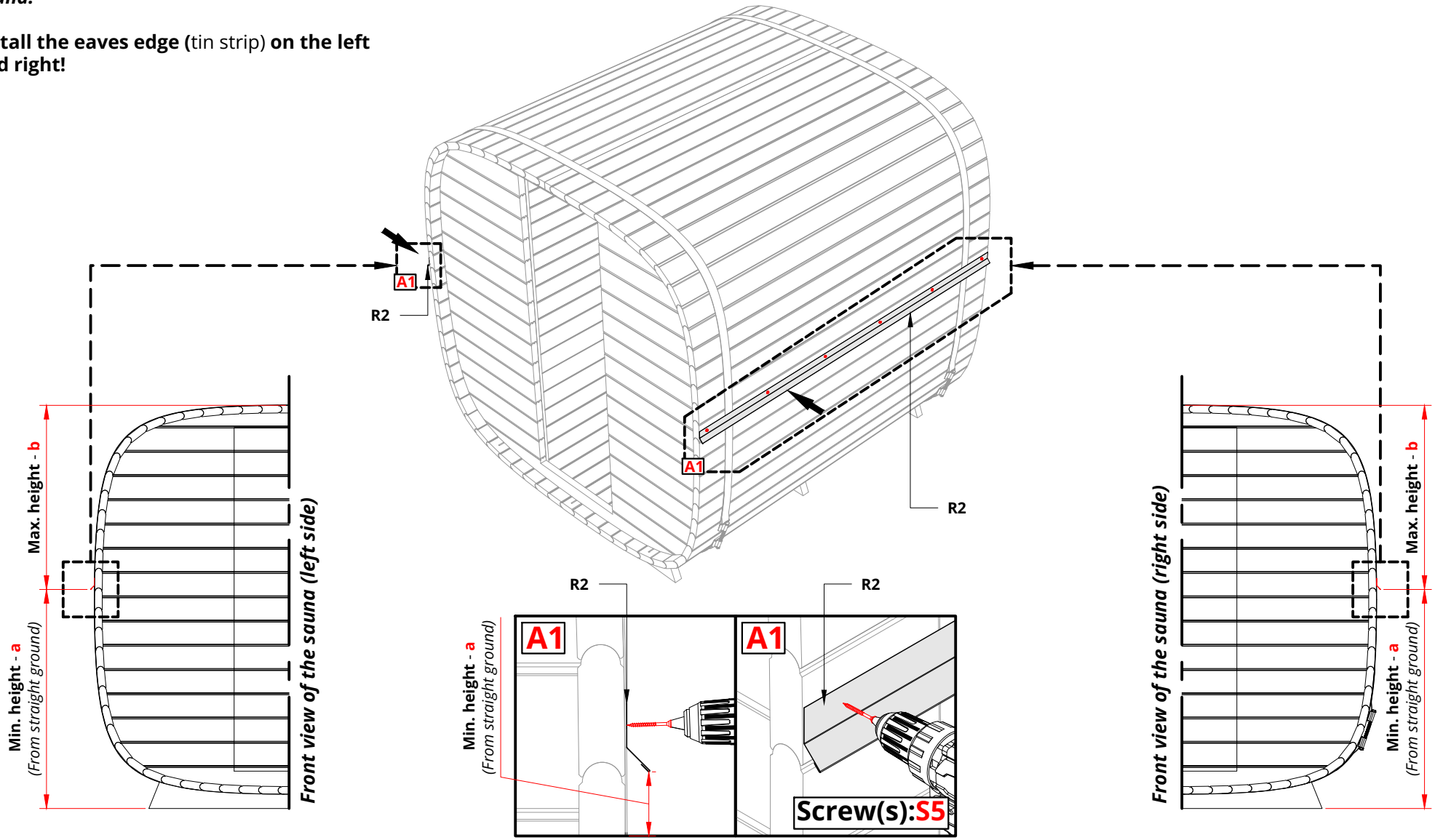

Nail(s)*	Name:	Quantity:
	R6	~40

*Nail dimensions - exterior construction detail list

Use a heat source when bending the underlay!

Install the underlay in the center of the roof!
The underlay must extend over the front end and back end!
Fasten the underlay along the long edges!
Use a heat source when bending the underlay front end and back end!
Fasten the underlay front end and back end!
Cut off the ends that extend over the edge!

max. A	35 mm	~ 0'-1 3/8"
min. B	190 mm	~ 0'-7 1/2"
C	25 mm	~ 0'-1"

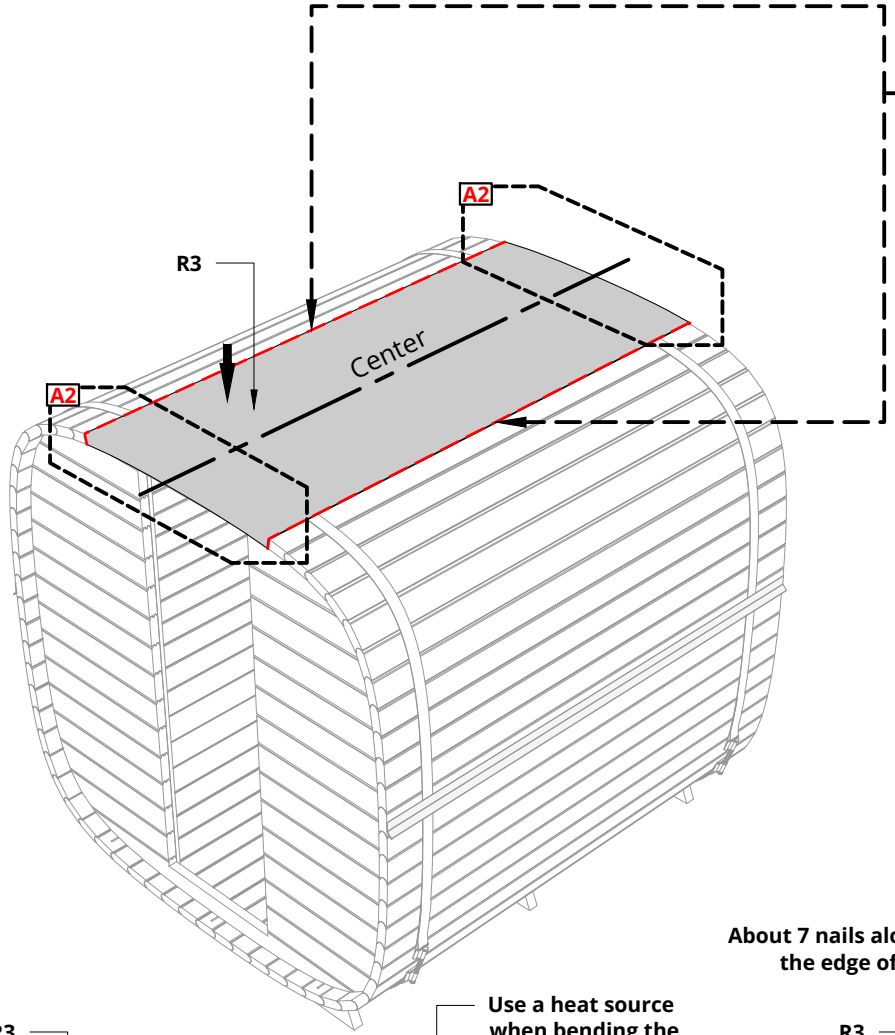

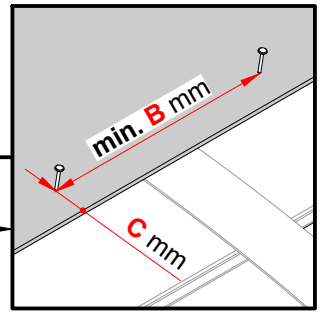

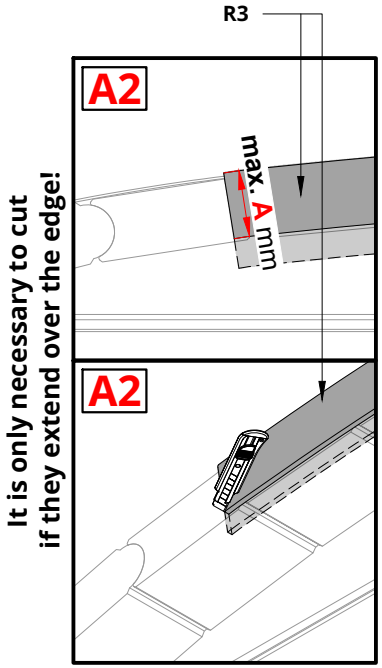

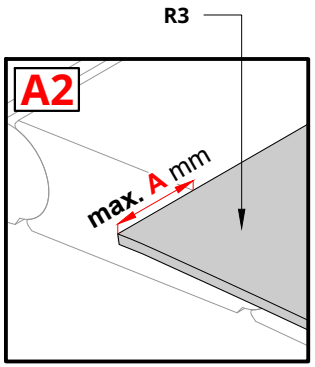

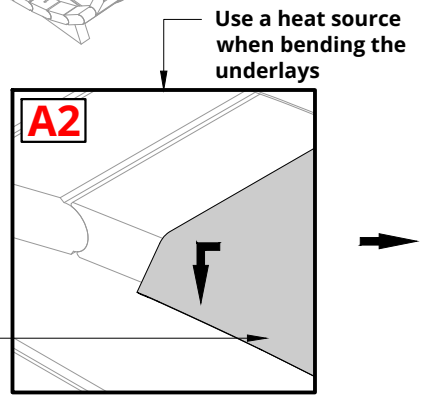

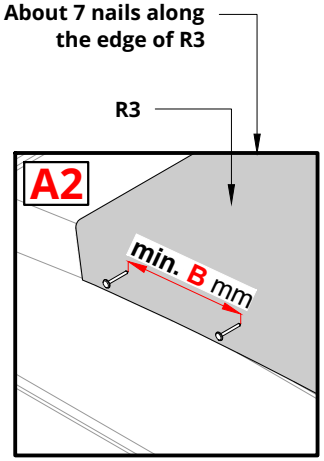

Katepal 3T Rectangle bitumen roof sheet
row arrangement for Barrel Saunas.

The base row is installed first, then the first row, etc. up in the middle of the sauna. The sheets that remain over the edge of the sauna wall are cut off and, if possible, used for other rows.

The base row starts at the front end of the sauna, row 1 always starts offset from the front end.

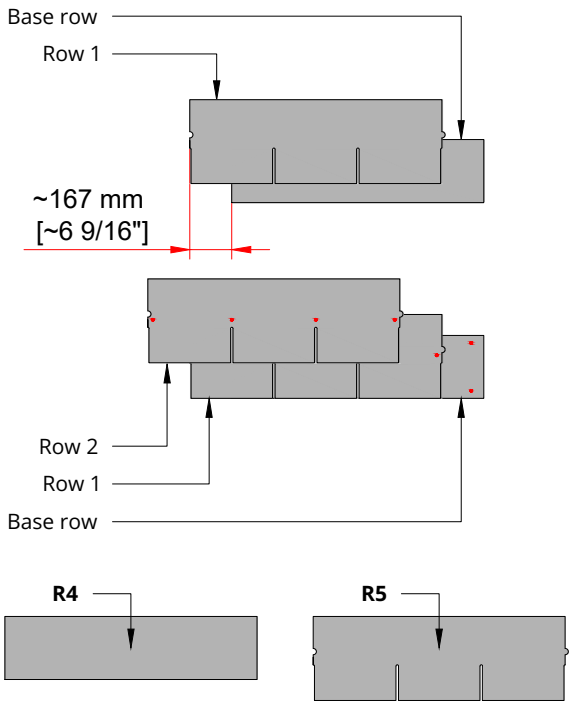

Qty. R4	9 pcs
Qty. R5	60 pcs

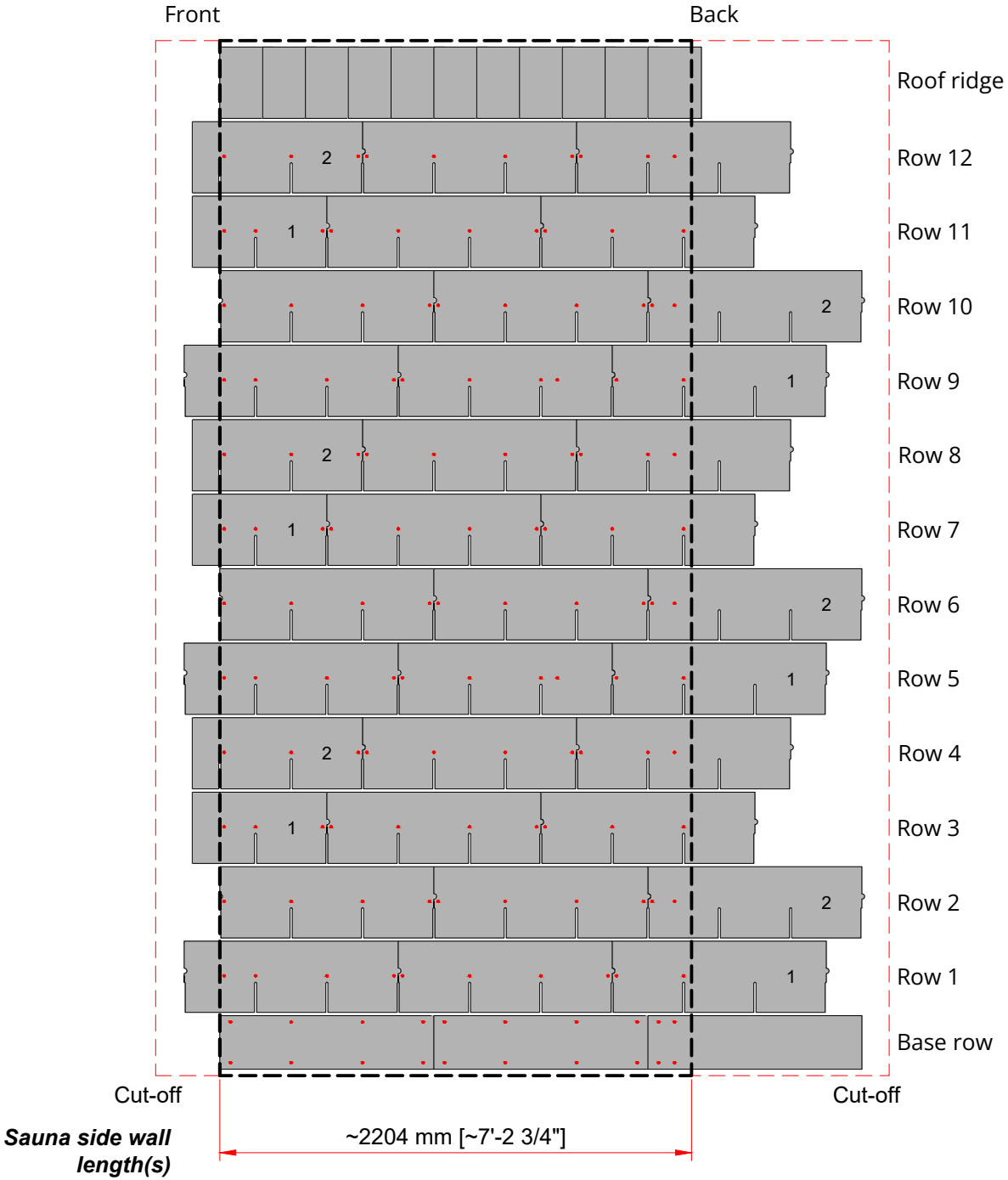

Nail(s)*	Name:	Quantity:
	R6	~40

*Nail dimensions - exterior construction detail list

Sheets are self-adhesive, for better adhesion use a heat source!

The base row starts from the front!
Cut sheets that extend over the edge! (It is only necessary to cut if they extend over the edge!)
Suitable leftovers can be used!
Repeat these steps on the other side as well!

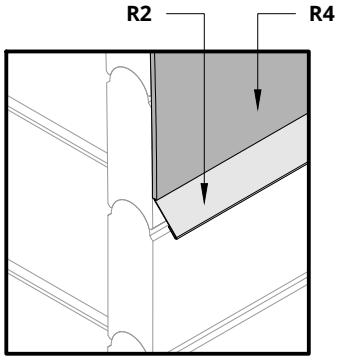

a	190 mm	~ 0'-7 1/2"
b	50 mm	~ 0'-1 15/16"
c	~283 mm	~ 0'-11 1/8"
d	~333 mm	~ 1'-1 1/8"
e	30 mm	~ 0'-1 3/16"

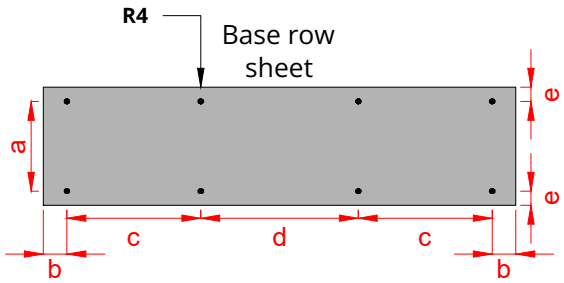

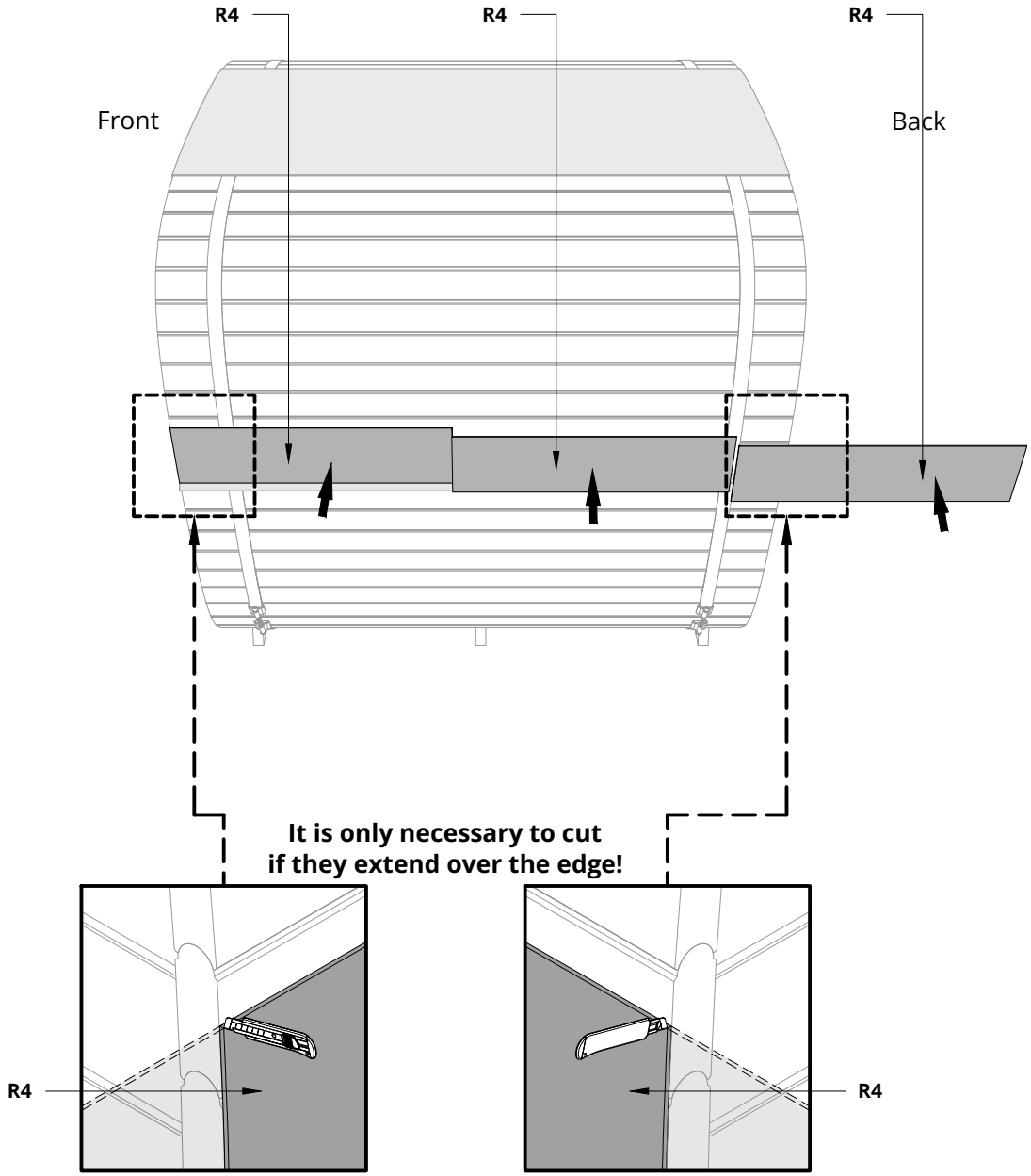

Nail(s)*	Name:	Quantity:
	R6	~240

*Nail dimensions - exterior construction detail list

Sheets are self-adhesive, for better adhesion use a heat source!

The 1.row starts at the front and offset!
Cut sheets that extend over the edge!
Suitable leftovers can be used!
Repeat these steps on the other side as well!

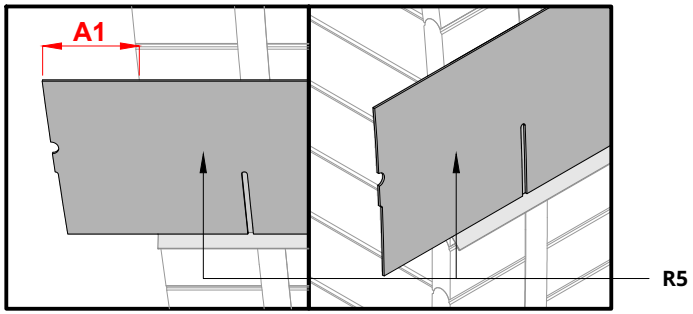

A1	~167 mm	~ 0'-6 9/16"
a	162 mm	~ 0'-6 3/8"
b	171 mm	~ 0'-6 3/4"
c	~313 mm	~ 1'-0 5/16"
d	~333 mm	~ 1'-1 1/8"
e	20 mm	~ 0'-0 13/16"

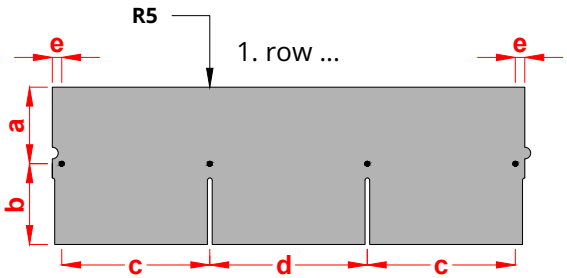

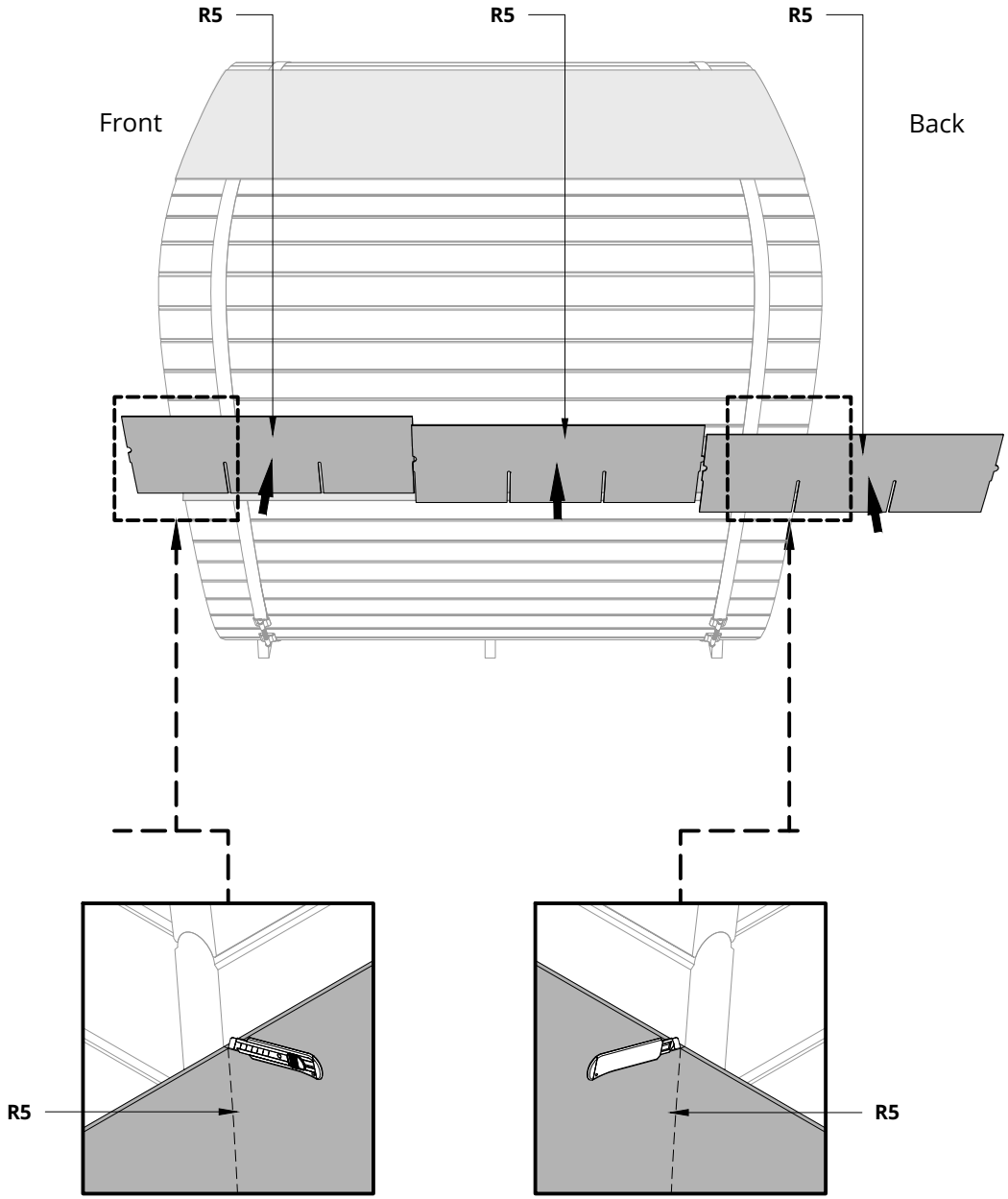

Nail(s)*	Name:	Quantity:
	R6	~44

*Nail dimensions - exterior construction detail list

Sheets are self-adhesive, for better adhesion use a heat source!

The roof ridge can be started from the back end of the sauna or from the front end!
Cut sheets that extend over the edge!
On the last piece, use bitumen sealant, not nails!

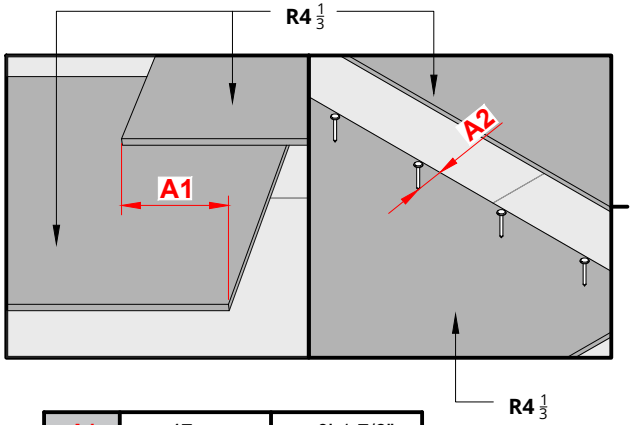

A1	~47 mm	~ 0'-1 7/8"
A2	25 mm	~ 0'-1"
a	~333 mm	~ 1'-1 1/8"

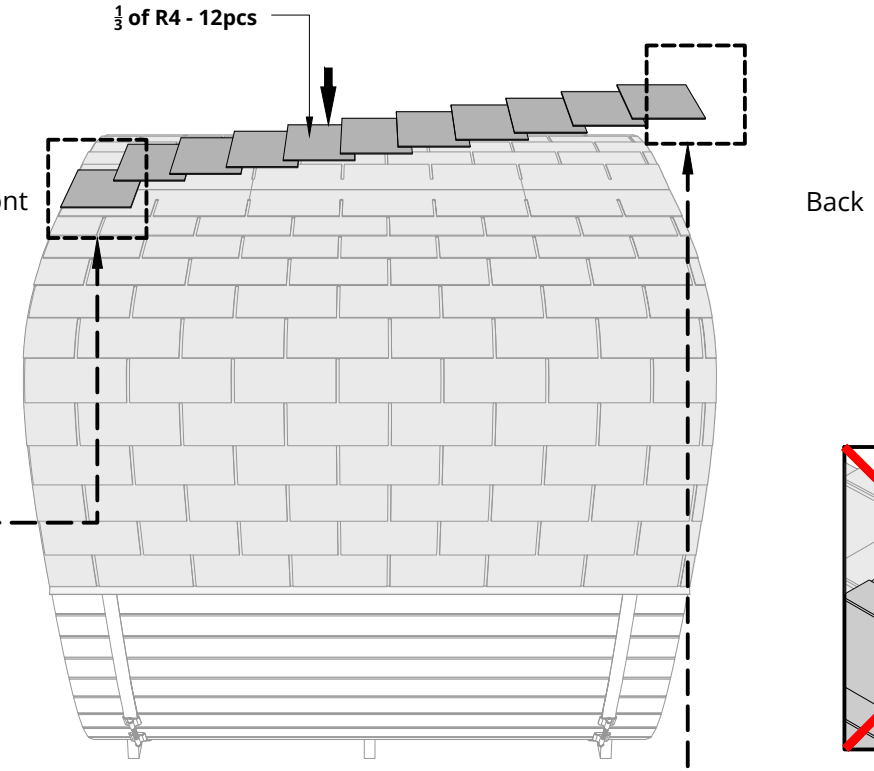

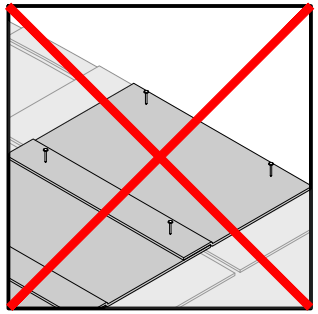

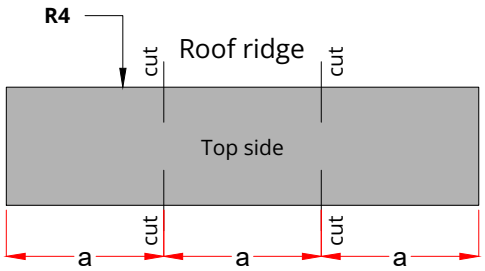

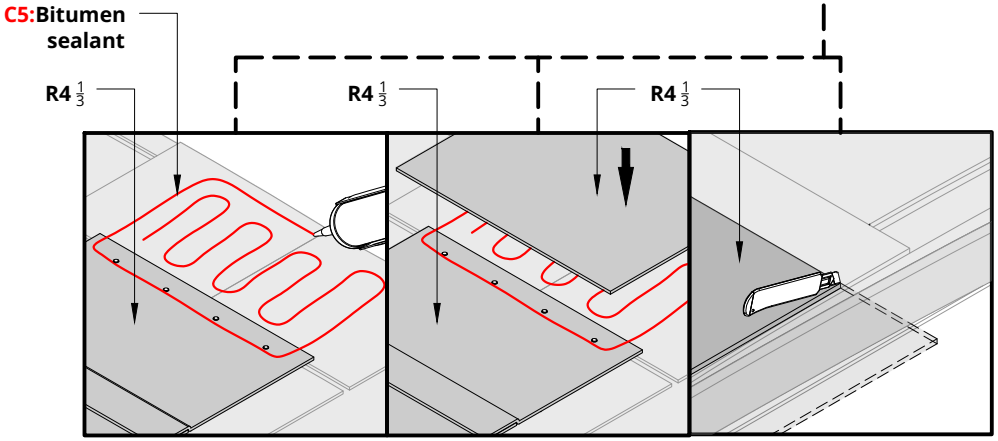

Screw(s)*	Name:	Quantity:
	S6.1	48

*Screw dimensions - exterior construction detail list

Please countersink the screw head(s)!
Install the cover boards R8, starting from the bottom!
Attach 8 cover boards at the front and back of the sauna!
Fix each with 3 screws!
Fill the gaps between the bitumen sheets and covering boards in front and back with bitumen sealant!

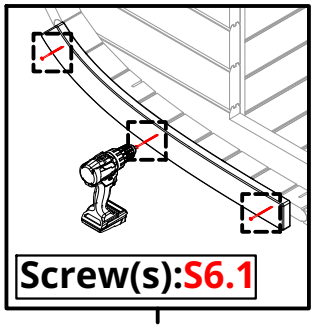

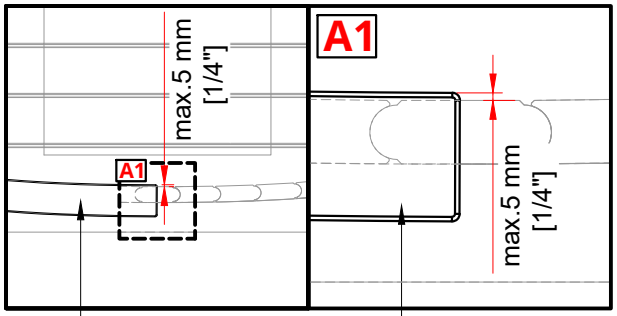

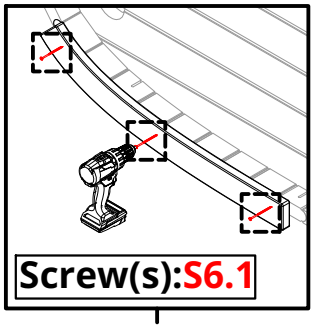

R8

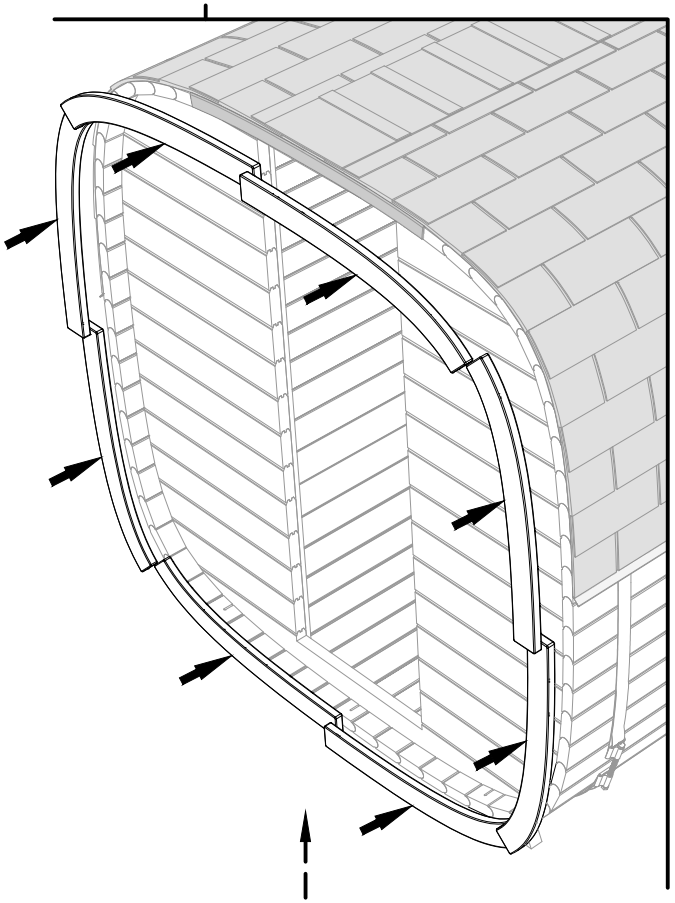

Front view of the sauna

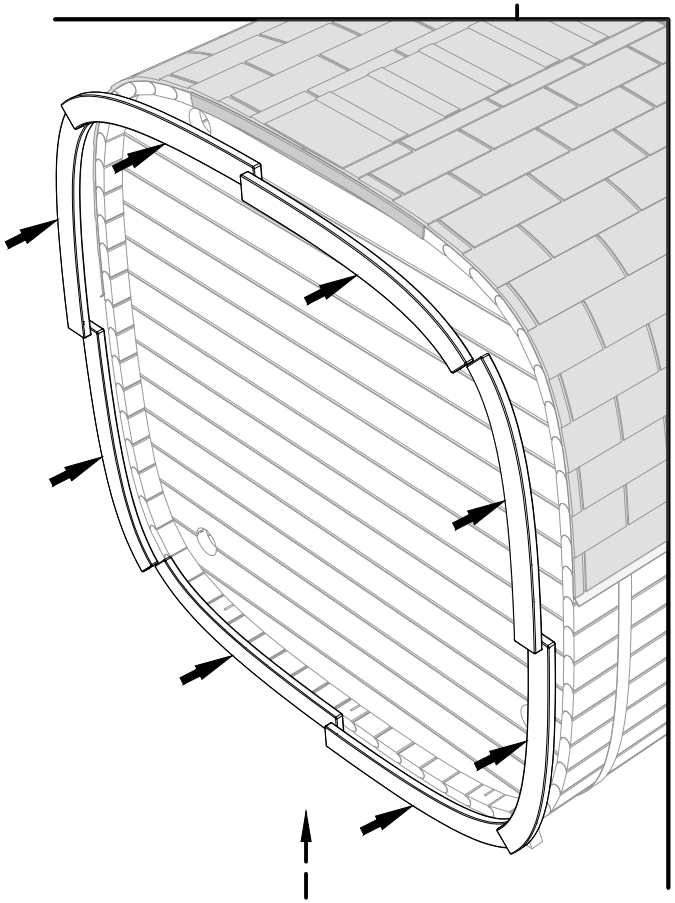

Back view of the sauna

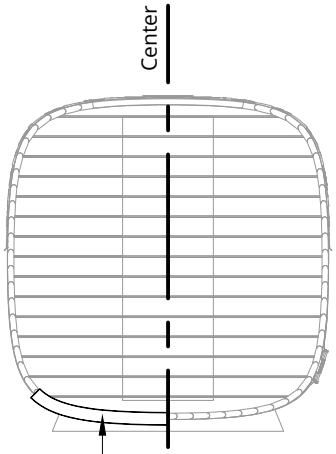

R8

C5:Bitumen sealant

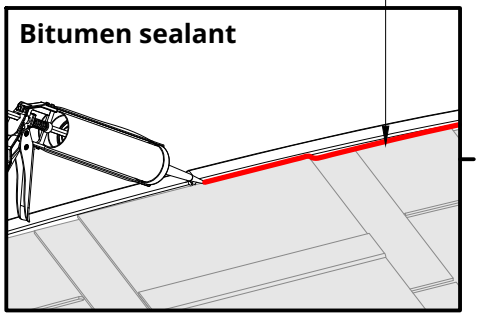

Screw(s)*	Name:	Quantity:
	S1	18

*Screw dimensions - exterior construction detail list

Install The inner and outer ventilation grilles V2 and adjustable cover V3!

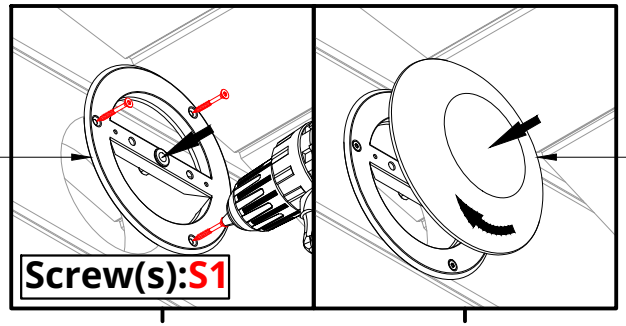

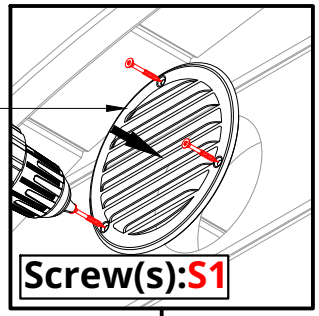

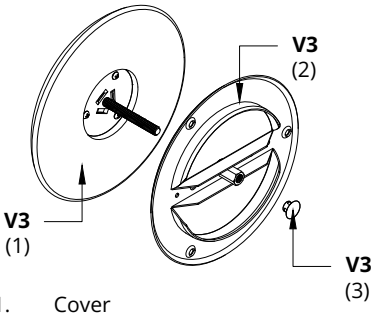

1. Cover
2. Frame
3. Plug

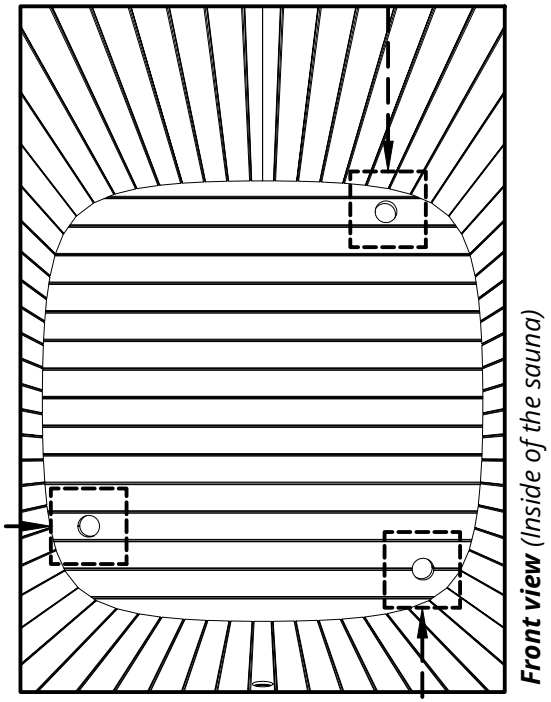

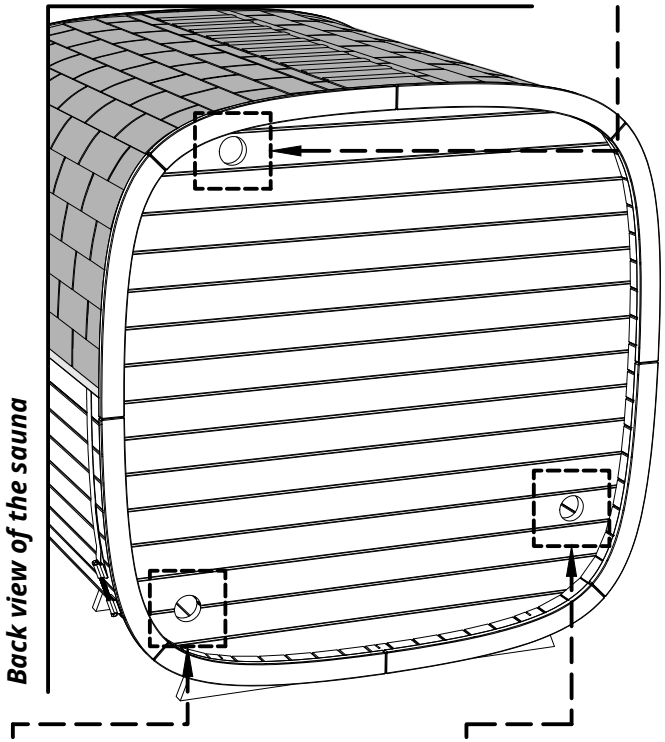

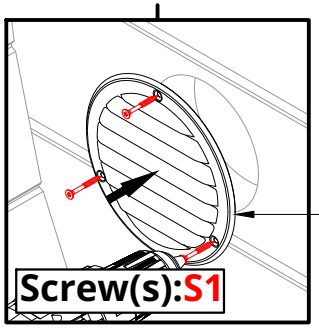

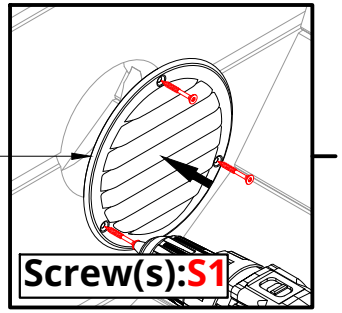

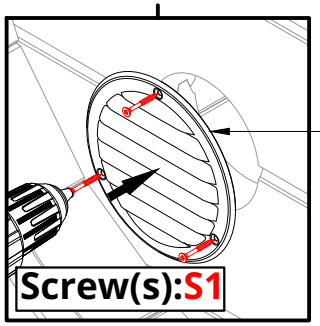

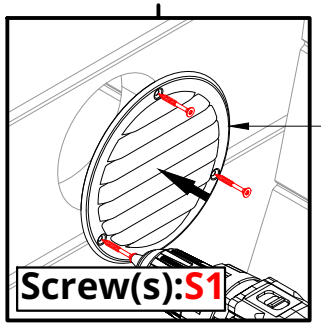

Screw(s)*	Name:	Quantity:
	S6.2	18
	S3.2	14

*Screw dimensions - exterior construction detail list

NB! use a level

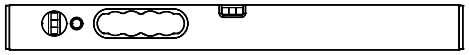

Please countersink the screw head(s)!

Insert hole cover P if they are not attachedand
Install the door handle!
Remove the front wall connection strips!
Install the door from the inside!
Install windows (If ordered)(Only for woodwall)!
Install door moldings!

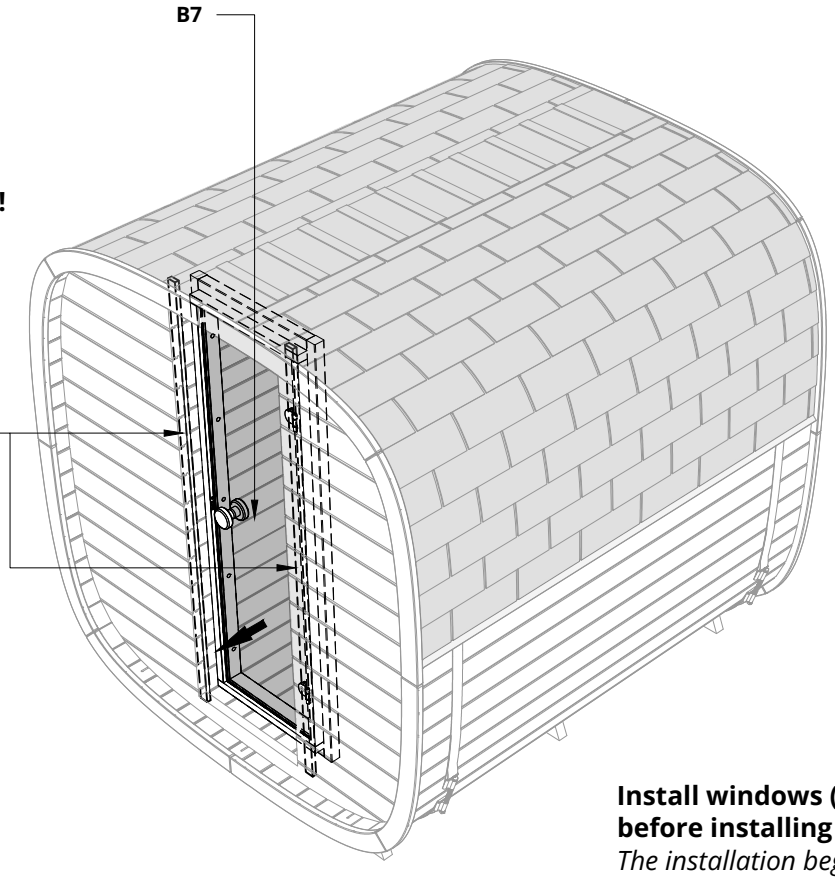

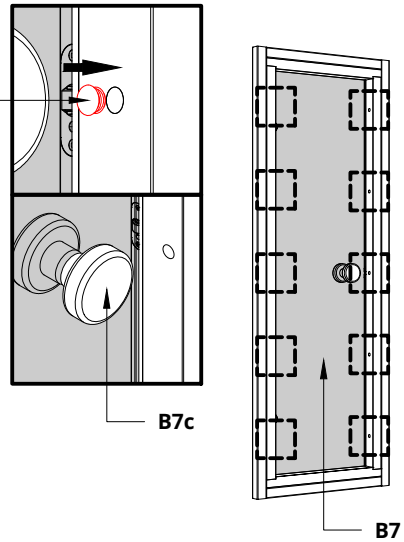

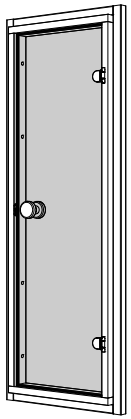

Glass door

OR

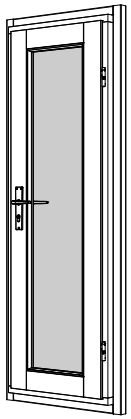

Wooden door

***B7** depends on the choice of order*

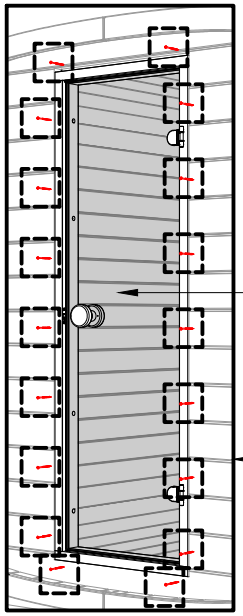

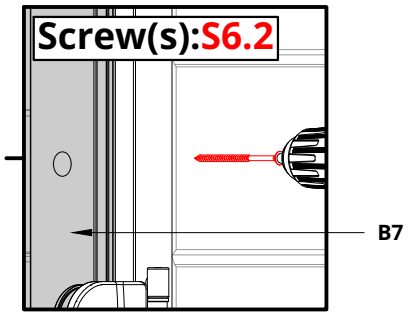

Suggestions!
Drill small hole(s) for the screws in the door moldings before screwing.

Install windows (If ordered), before installing door moldings!
The installation begins in chapter 5.4.

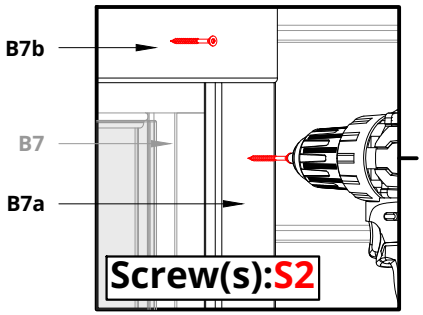

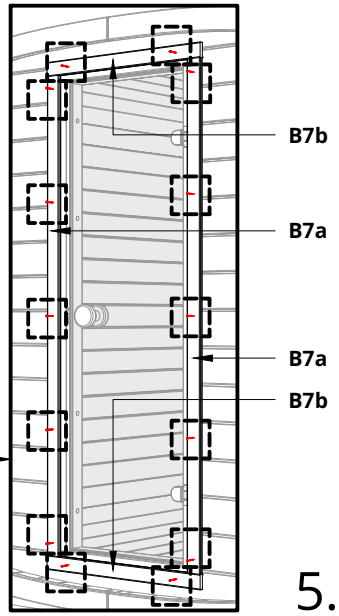

DOOR ADJUSTMENT MANUAL

1) Vertical adjustment of the door sash

The hinge on the side of the sash has a height adjustment bolt (fig.1), from which is possible to adjust the distance between the hinges. Turning clockwise, the hinges move further apart, and the door sash moves higher. It must be remembered that all hinges should be equally set at the same height, so as not to burden just one hinge.

Fig.1 Sash hinge height adjustment bolt

2) Horizontal adjustment of the door sash

The horizontal adjustment of the door sash can be done through the hinge on the frame (fig.2). Turning the bolt clockwise moves the sash closer to the hinge, turning counter-clockwise, moves the sash away from the hinge. The door sash should be adjusted so that the frame is at an equal distance from the edge of the frame. When turning the bolt, you should manually support the sash in the same direction so as not to bend the hinge.

Fig.2 Frame horizontal direction adjustment bolt

3) Adjusting the depth of the door frame

The distance of the door sash to the door frame can be adjusted both by the hinges (fig.3) and by the lock (fig.4). The distance between the sash and the frame can be adjusted by the hinges by turning the bolt in Fig.3 – clockwise, the sash moves closer to the frame, counter-clockwise further. The distance between the door sash and the frame on the lock side can be adjusted by bending the metal “ears” in figure 4 apart with a screwdriver. If necessary, the “ears” can also be back with a screwdriver.

Fig.3 Door sash depth adjustment bolt

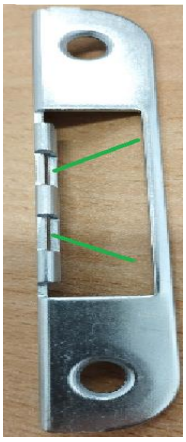

Fig. 4 Depth adjustment points on the lock side

4) Door finishing guide

- Clean the door from dust and dirt
- Remove or cover the lock, handles and hinges
- The product to be finished, must be dry and dust-free
- Finish the door with a suitable primer (NB! Finish both sides of the door)
- Finish the door with a substance suitable for outdoor conditions

Finishing is important so that the door maintains smooth closing and is durable in outdoor conditions.

Screw(s)*	Name:	Quantity:
	S6.2	14
	S3.2	14

*Screw dimensions - exterior construction detail list

NB! use a level

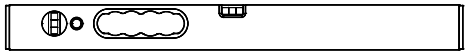

Insert hole cover P if they are not attached!

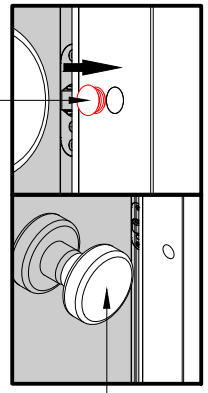

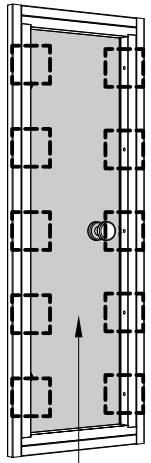

Door installation for the front glass wall!
Please countersink the screw head(s)!

Insert hole cover P if they are not attached!
Install the door from the inside and install door moldings!

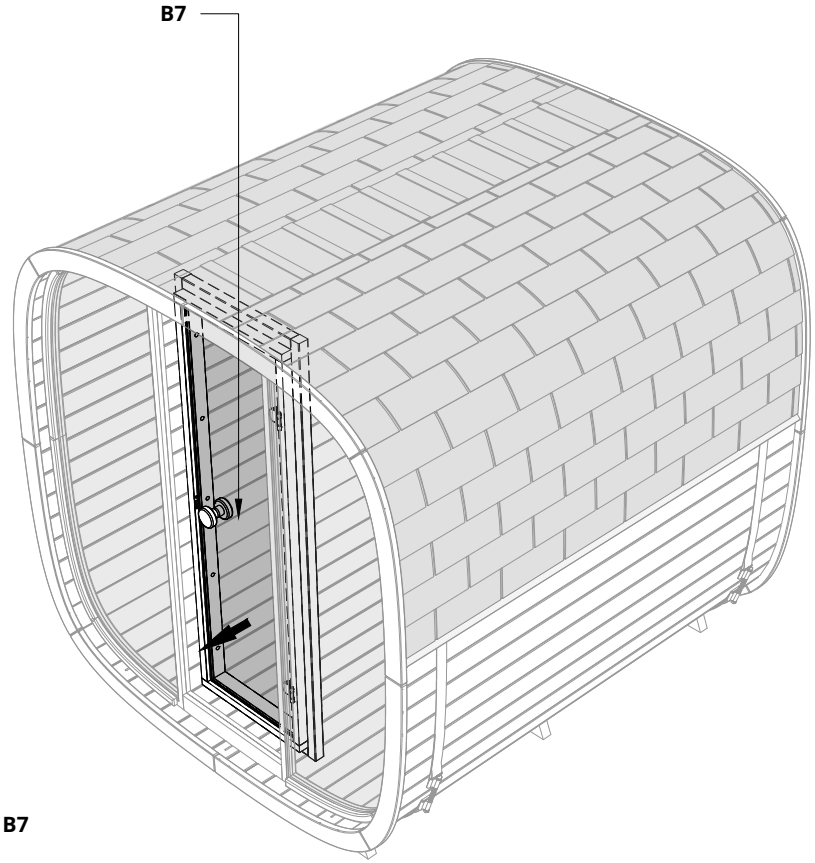

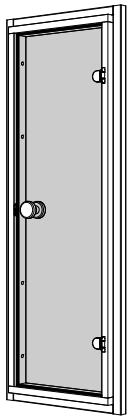

Glass door

OR

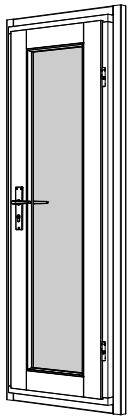

Wooden door

***B7** depends on the choice of order*

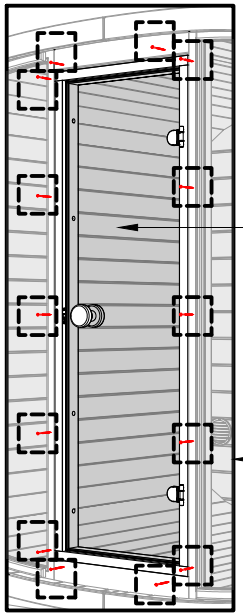

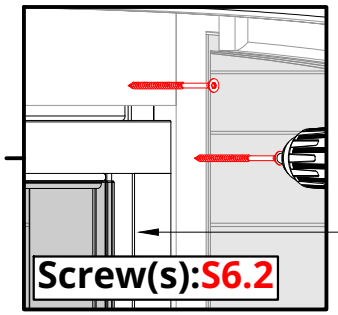

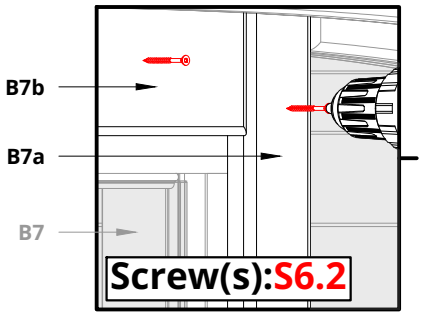

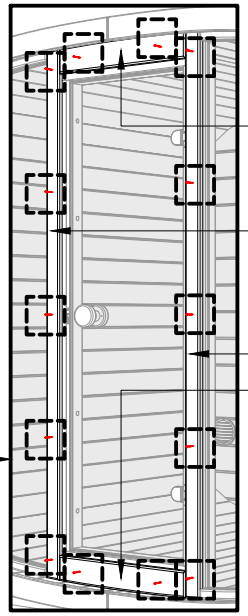

ADJUSTING THE HINGES

- Remove plastic from hinges (first picture). To remove plastic, lift it from the places indicated by the red lines;
- To regulate hinges you need TORX 30 bit and cordless drill;
- Loosen the bolt shown in figure slightly. (DO NOT OPEN COMPLETELY);
- If both hinge bolts are slightly loosened, it is possible to move the glass in the directions shown in the figure;
- If the glass is set to the required distance, the bolts must be tightened again.

ADJUSTMENT OF THE ROLLER-LOCK

- PH2 screwdriver required;
- The roller lock can be adjusted by turning the screw indicated by the red line;
- Turning clockwise moves the roller inward and turning counter-clockwise moves the roller outward;
- The roller should be adjusted so that the glass moves freely behind the roller without applying force.
- The roller lock adjustable screw must be always on the upper side of the roll, otherwise the door may get stuck.

ADJUSTING ABLOY HINGES FOR GLASS DOORS

Features:

- The ABLOY FL 65 SSD Fe is a glass door hinge with lateral adjustment of +/- 3 mm.
- The hinge load capacity is approximately 40 kg when using two hinges.

Tools required for adjustment:

- Cordless drill (if hexagon wrenches are not available)
- Bit SW5 or 5mm hexagon wrench
- Bit SW3 or 3mm hexagon wrench

Adjustment guide:

- Remove the plastic cover from the hinges. Cover removal, in the direction indicated by the arrows.

- Loosen the bolt shown in the figure slightly. (DO NOT UNSCREW COMPLETELY)

- To adjust the hinges, you need to turn the screws shown in the picture with a bit SW3 or a 3mm hexagon wrench.

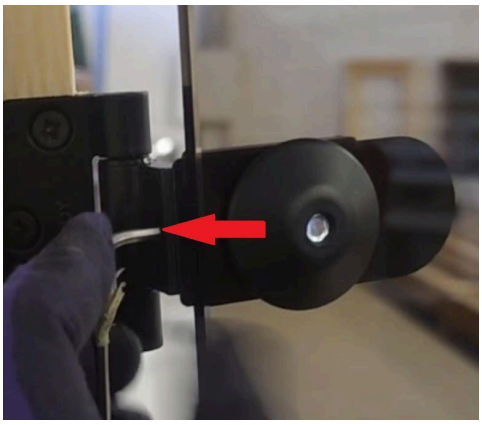

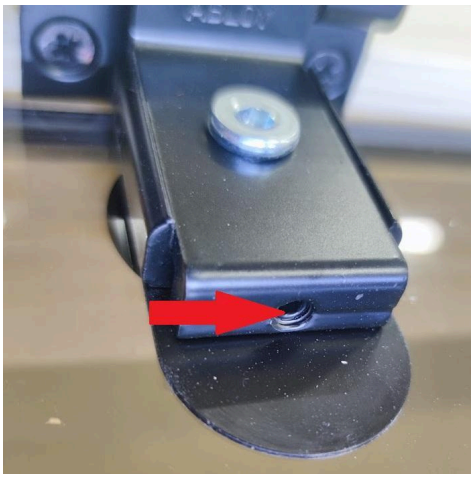

- The direction the glass moves depends on the direction the screw is turned.

  First picture - turning the screw clockwise, the glass moves closer to the hinges (assuming the screw on the other side has been loosened beforehand).

  Second picture - turning the screw counterclockwise, the glass moves away from the hinges (afterwards, tighten the screw on the other side).

- Once the hinges are adjusted to the correct position, tighten the larger bolt back.

- Put the cover back on.

General recommendations:

- When adjusting the hinge, it is important to be careful not to damage the glass or the hinge itself.

Youtube video >

Screw(s)*	Name:	Quantity:
	S7	36
	S6.2	8

*Screw dimensions - exterior construction detail list

NB! use a level

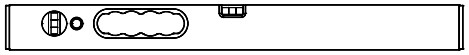

Please countersink the screw head(s)!
Only for the wooden front wall!

Add some extra screws the locations shown in the picture!
Measure and mark the window(s) locations if they are unmarked or vanished!
Drill holes in the corners of the marked area!
Cut the holes!
Attach the pieces of boards together!

a	568 mm	~ 1'-10 3/8"
b	120 mm	~ 0'-4 3/4"
c	360 mm	~ 1'-2 3/16"
d	~1210 mm	~ 3'-11 5/8"
e	5 mm	~ 0'-0 3/16"

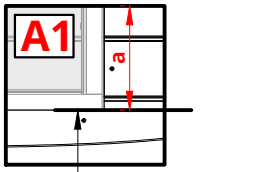

The lower edge of the door opening

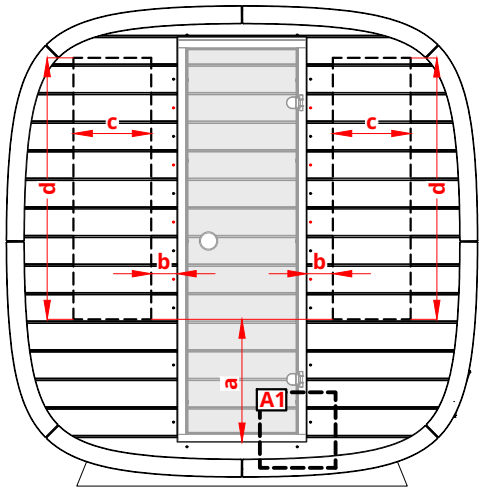

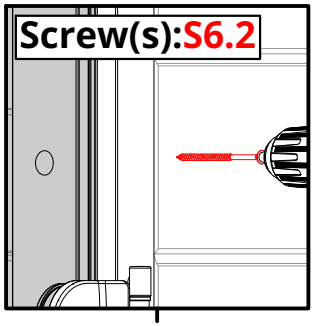

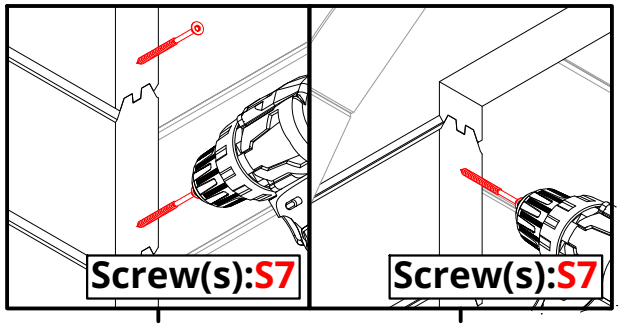

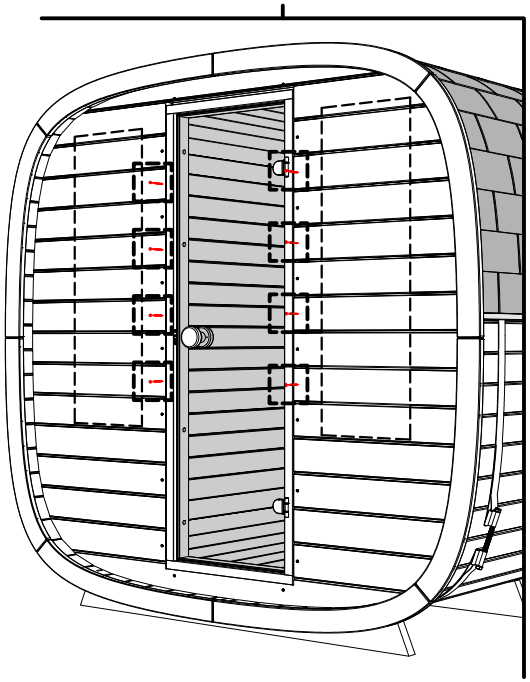

Front view of the sauna

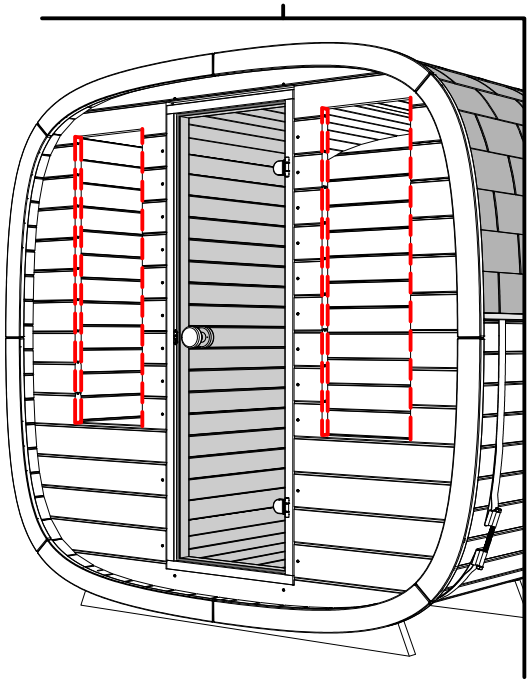

Front view of the sauna

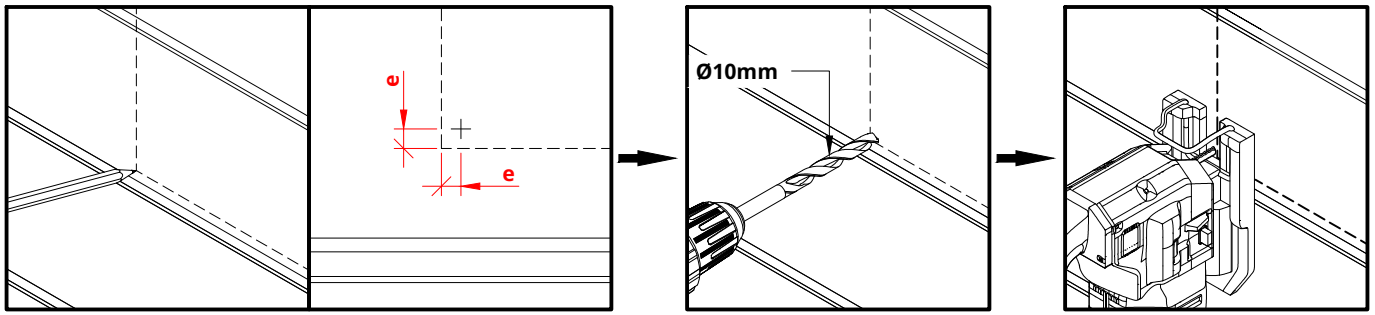

Screw(s)*	Name:	Quantity:
	S4	28
	S2	24

*Screw dimensions - exterior construction detail list

NB! use a level

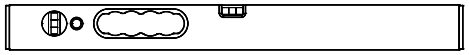

Please countersink the screw head(s)!

Install the windows from the outside, fasten with screws!
install window moldings!

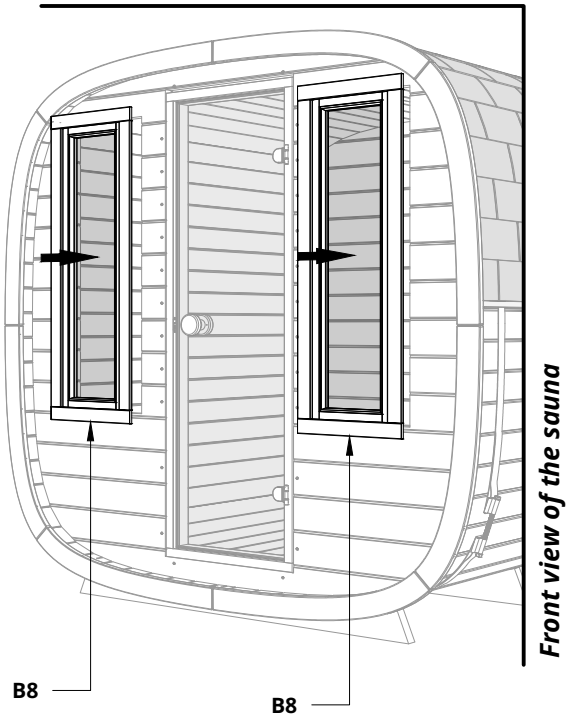

The same steps on the right and left windows

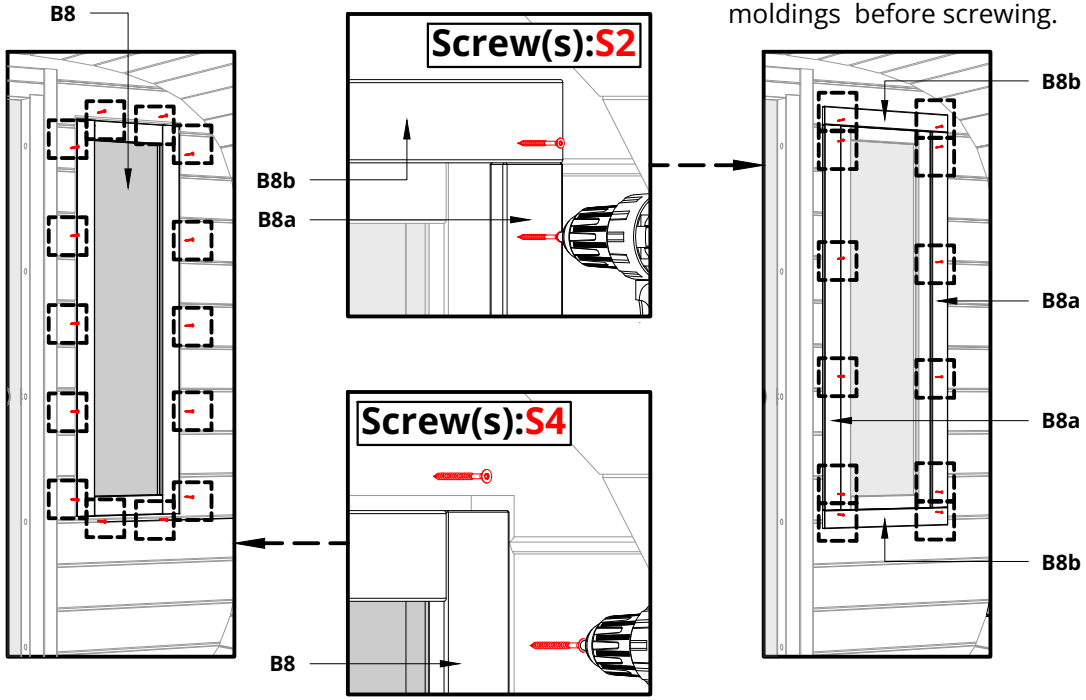

Suggestions!
Drill small hole(s) for the screws in the window(s) moldings before screwing.

Continue to install the door moldings!!

Screw(s)*	Name:	Quantity:
	S7	10

*Screw dimensions - Bench assembly detail list

NB! use a level

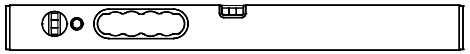

Please countersink the screw head(s)! Measured from the center board of the floor! Use glue between the square wood K... and the wall!

Install square woods for benches!

a	852 mm	~ 2'-9 9/16"
Distance - b	~1502 mm	~ 4'-11 1/8"

Front view *(from inside)*

Back view *(from inside)*

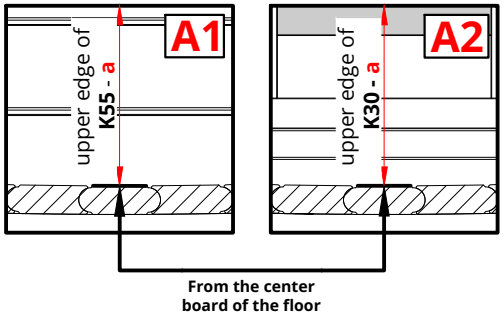

Notice!

Drill 4mm hole in the K... square woods before screwing.

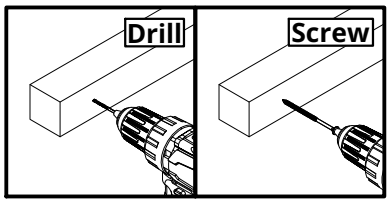

Use glue!

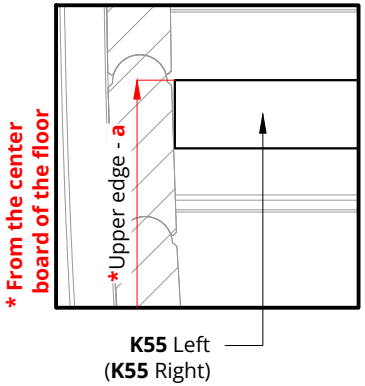

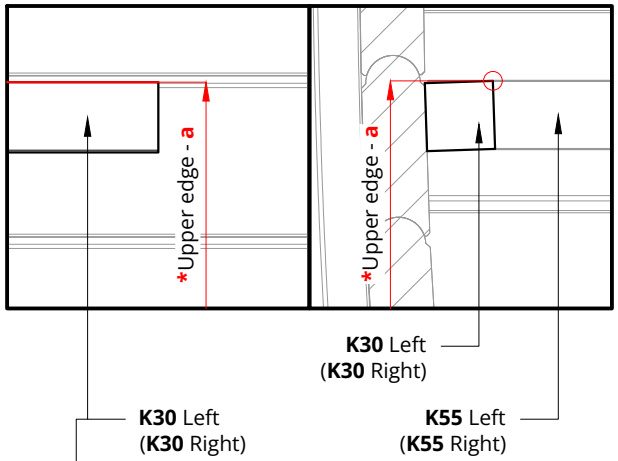

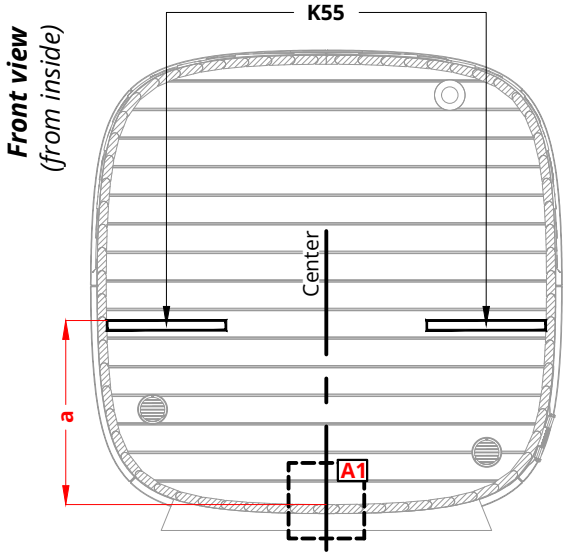

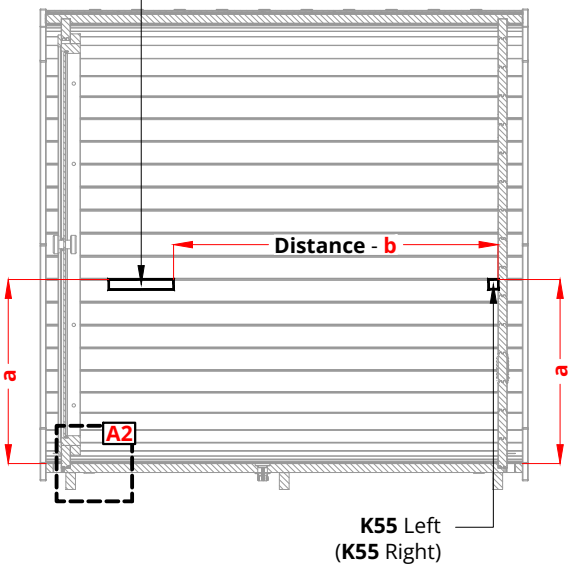

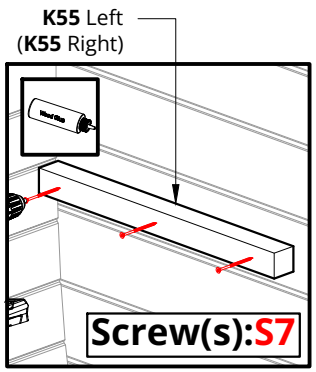

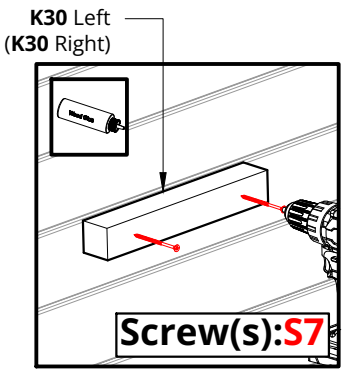

Screw(s)*	Name:	Quantity:
	S7	12
	S5	6

*Screw dimensions - Bench assembly detail list

NB! use a level

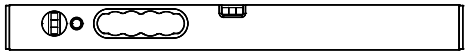

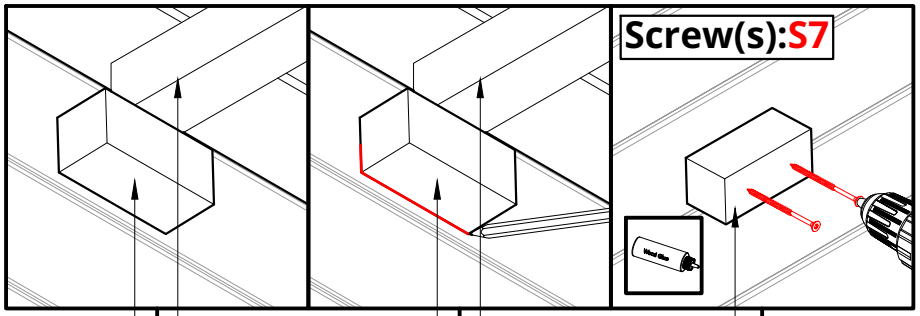

Please countersink the screw head(s)!
Use glue between the square wood K... and the wall!

Install the upper bench, screw only to K55 square wood and add support(s) to keep the bench level!
Place the square wood K10 it under the bench as shown in the picture and mark the location!
Unscrew the bench from the K55 and move the bench aside to install K10 where it was marked!
Put the bench back and fasten it to K30 and K55!

Repeat these steps on the other side as well!

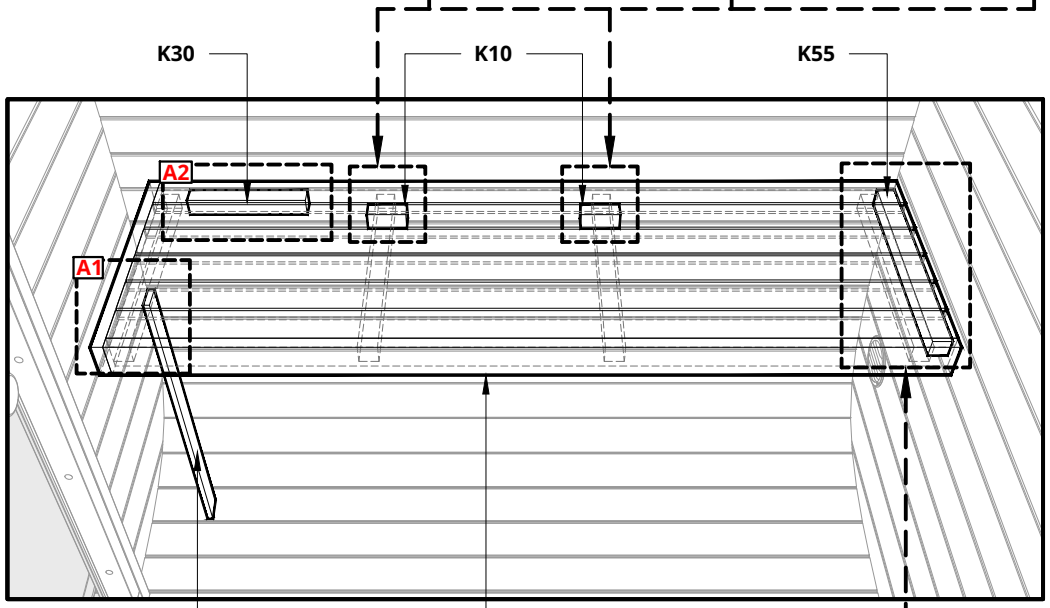

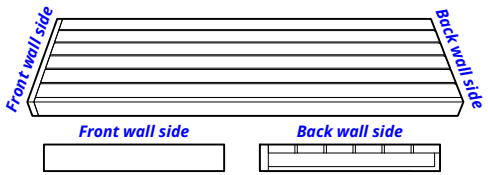

Upper bench **I1a** Left

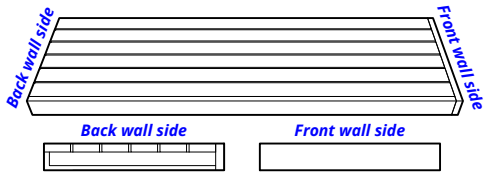

Upper bench **I1b** Right

Notice!

Drill 4mm hole in the K... square woods before screwing.

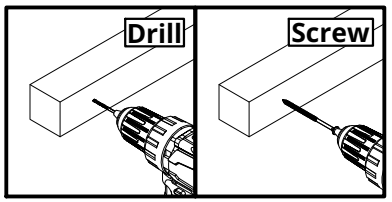

Use glue!

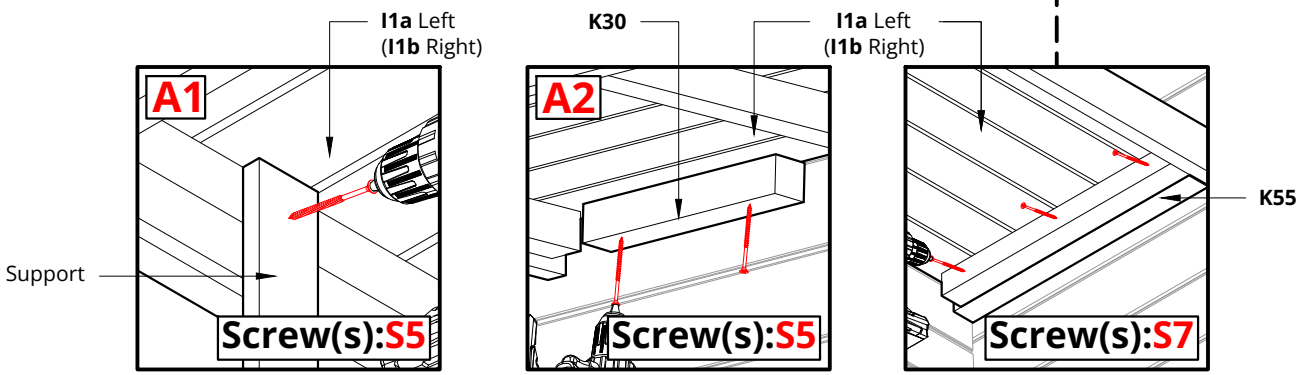

Screw(s)*	Name:	Quantity:
	S5	8

*Screw dimensions - Bench assembly detail list

NB! use a level

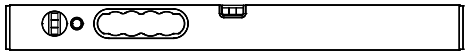

Please countersink the screw head(s)!
The square wood(S) K90 are longer and must be cut to the correct size!

Measure the position of the upper bench leg K90!
Mark the position of the bench leg(s) K90!
Measure the length of the bench leg(s) K90 from the marked position downwards!
Cut bench leg to the correct size!
Remove supports and install bench leg(s) 90!

Repeat these steps on the other side as well!

Distance - a	~ 201 mm	~ 0'-7 15/16"
b	~25 mm	~ 0'-1"

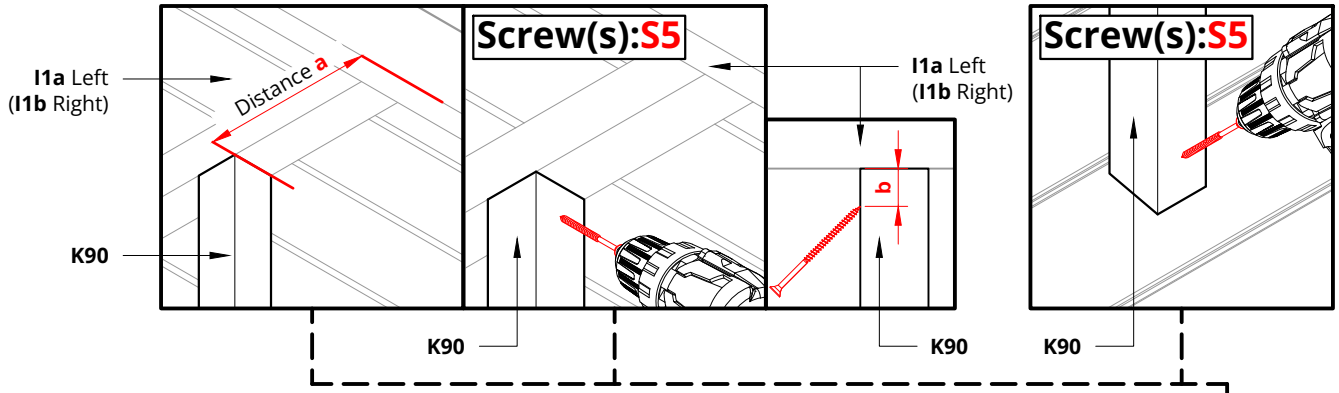

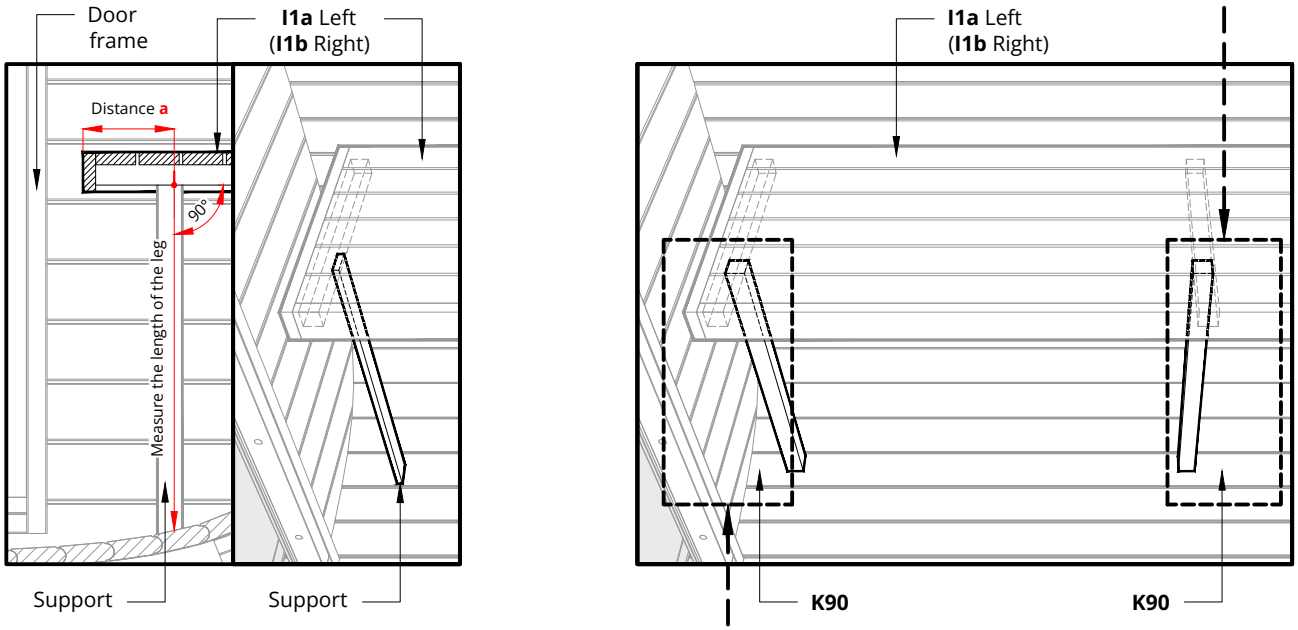

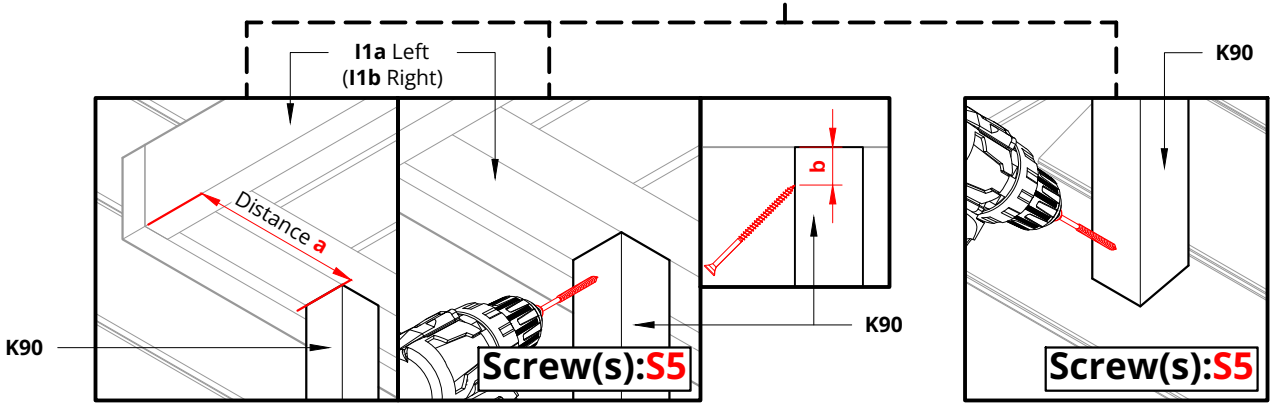

Notice!

Drill 4mm hole in the K... square woods before screwing.

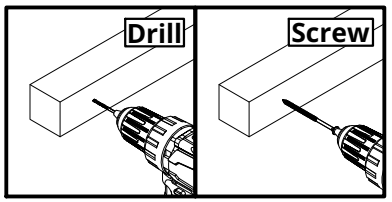

Screw(s)*	Name:	Quantity:
	S5	16

*Screw dimensions - Bench assembly detail list

NB! use a level

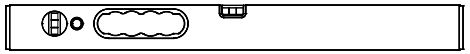

Please countersink the screw head(s)! The cover board(s) D1 and D2 are longer, they must be cut to the correct size!

Install the bench leg K90 cover board(s) D1 and D2!

Repeat these steps on the other side as well!

a	28 mm	~ 0'-1 1/8"
b	~450 mm	~ 1'-5 11/16"

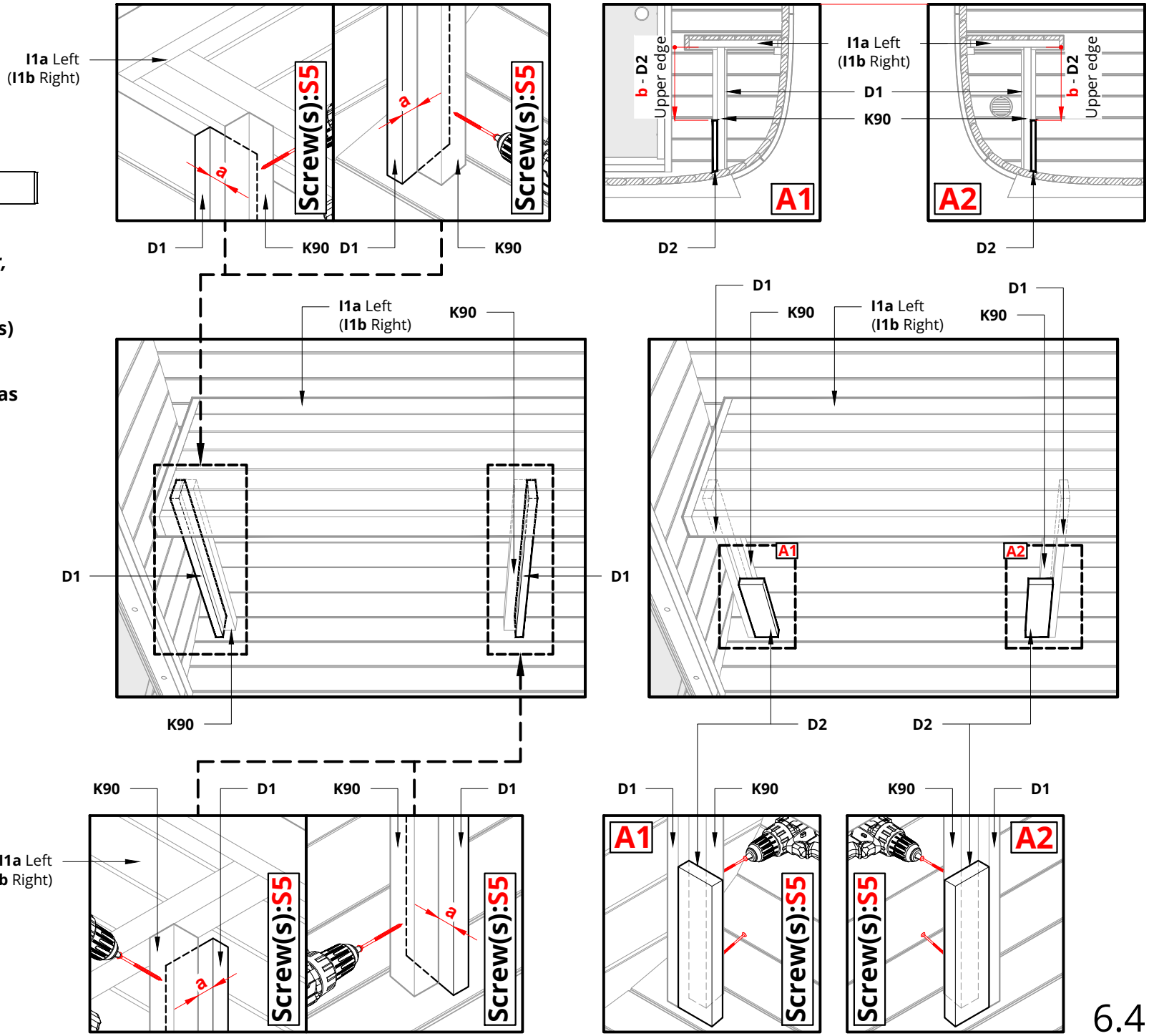

Notice!

Drill 4mm hole in the K... square woods before screwing.

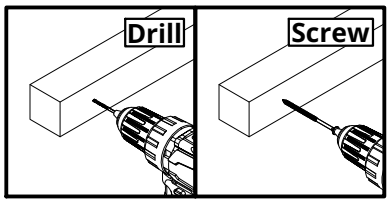

Screw(s)*	Name:	Quantity:
	S5	14

*Screw dimensions - Bench assembly detail list

NB! use a level

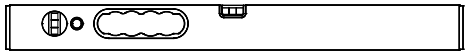

Please countersink the screw head(s)!
The square wood(s) K45 are longer, they must be cut to the correct size!

Install the Lower bench!
Install some supports to keep the bench level!
Measure the length of the bench leg(s)K45!
Install the leg(s) K45 of the bench!
Remove support(s)!

Repeat these steps on the other side as well!

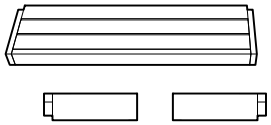

Lower bench **I2** Left and Right

Notice!

Drill 4mm hole in the K... square woods before screwing.

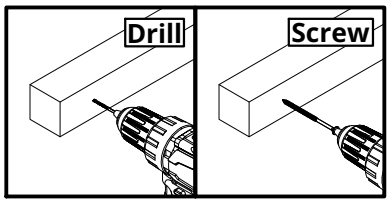

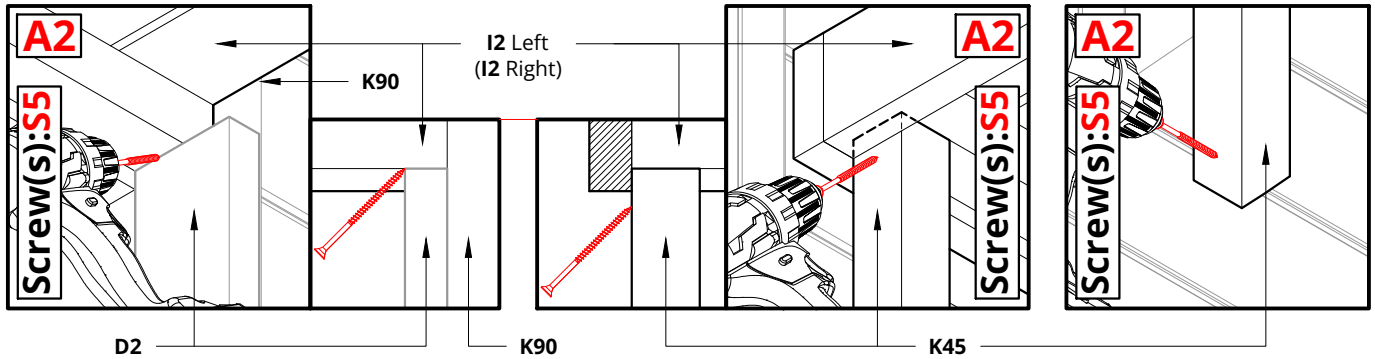

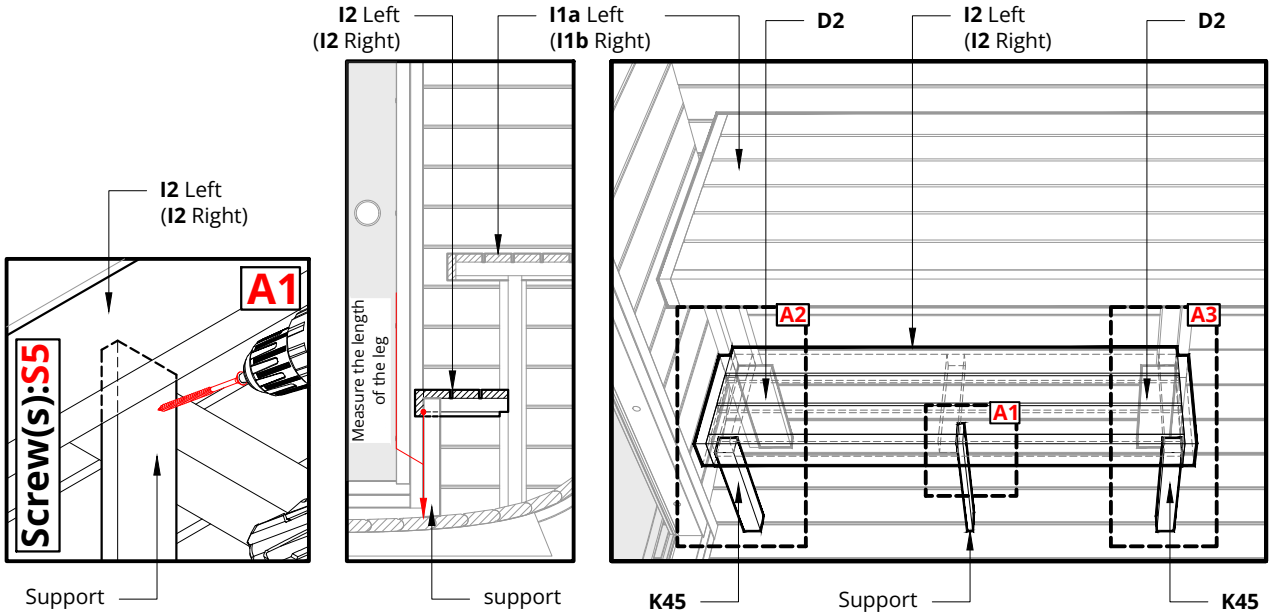

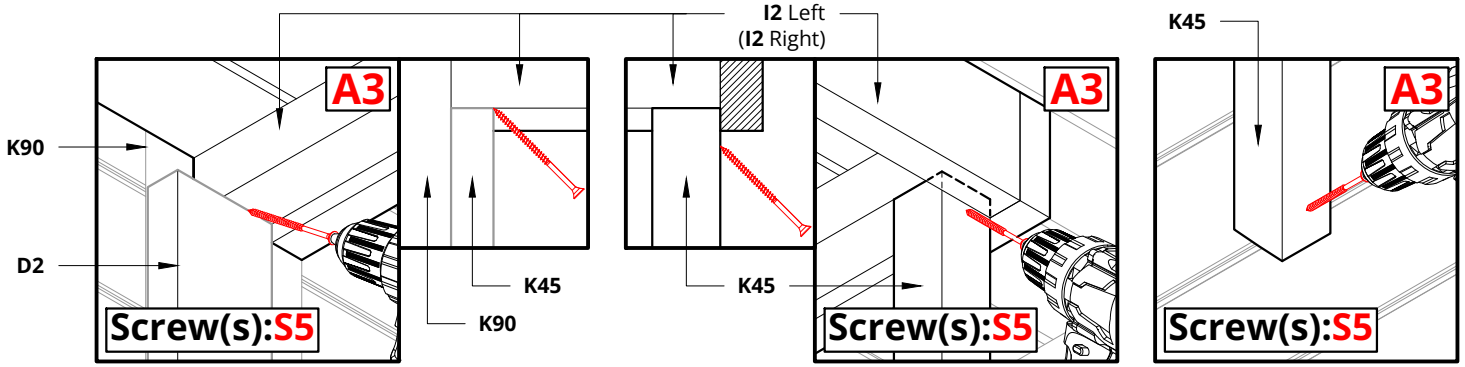

Screw(s)*	Name:	Quantity:
	S5	24

*Screw dimensions - Bench assembly detail list

NB! use a level

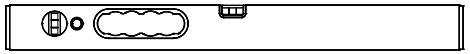

Please countersink the screw head(s)!
The square wood K45 and the cover board(s) D2 are are longer and must be cut to the correct size!

Install the middle leg K45 of the bench!
Install the bench leg(s) K45 cover board(s) D2!

Repeat these steps on the other side as well!

a	28 mm	~ 0'-1 1/8"
b	25 mm	~ 0'-1"
c	~21 mm	~ 0'-0 7/8"

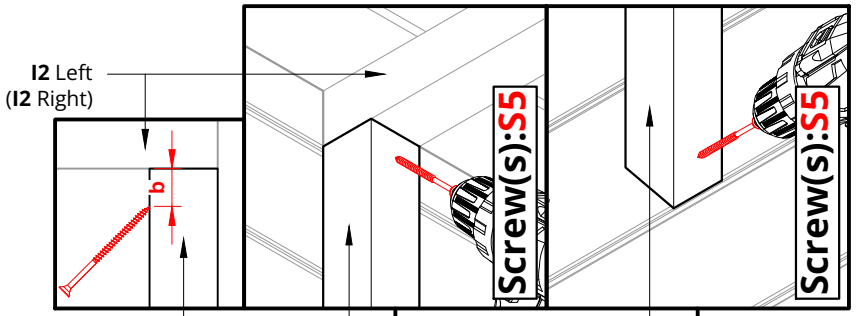

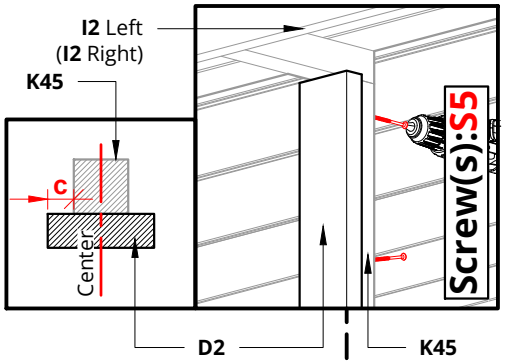

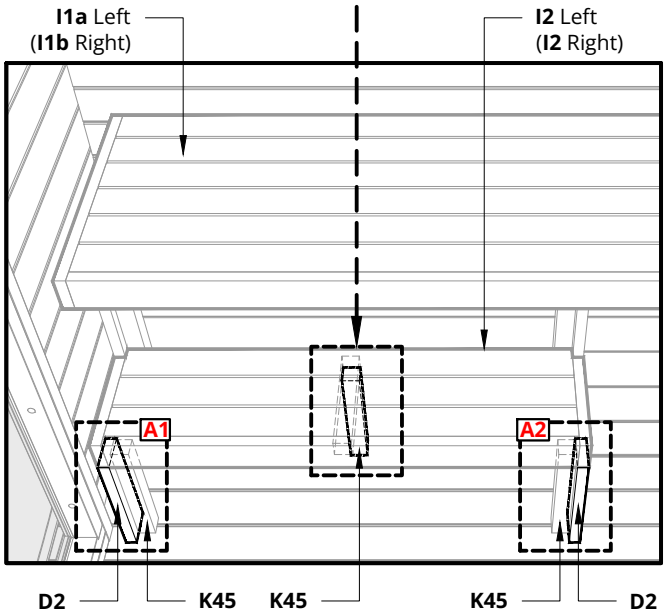

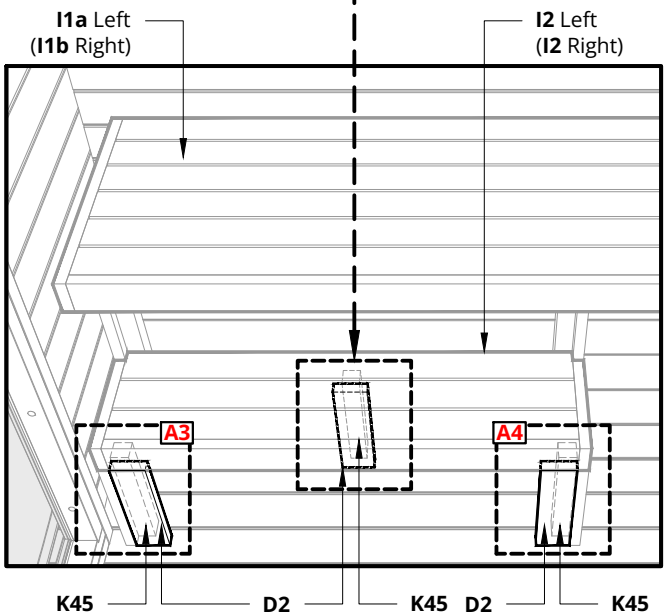

Notice!

Drill 4mm hole in the K... square woods before screwing.

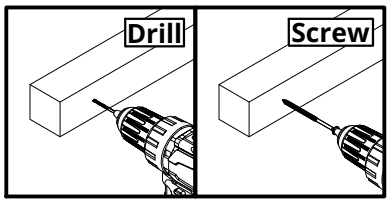

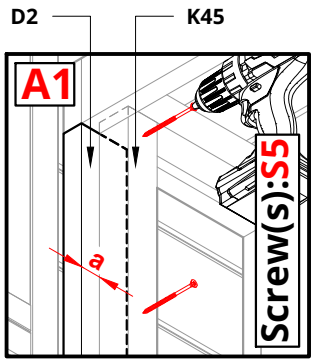

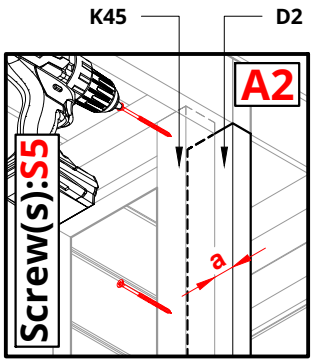

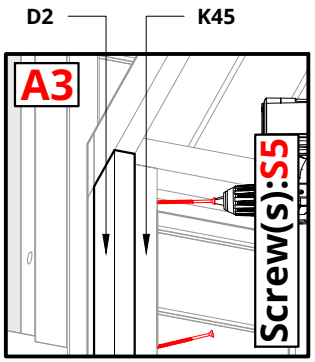

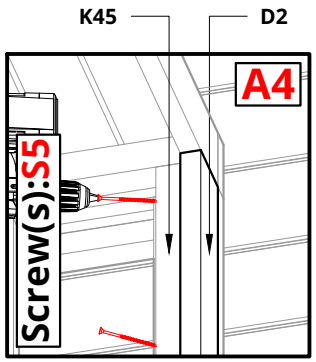

Screw(s)*	Name:	Quantity:
	S5	16
	S2	6

*Screw dimensions - Bench assembly detail list

NB! use a level

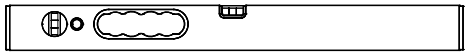

*a	360 mm	~ 1'-2 3/16"
b	~55 mm	~ 0'-2 3/16"
c	~3 mm	~ 0'-0 1/8"

*Recommended!!!

The cover board(s) D2 are are longer and must be cut to the correct size!

Install the bench backrest(s)!
Install cover board(s) D2! ***(If bench skirt is not ordered)***
To install bench skirt, follow chapter 7.1!

Repeat these steps on the other side as well!

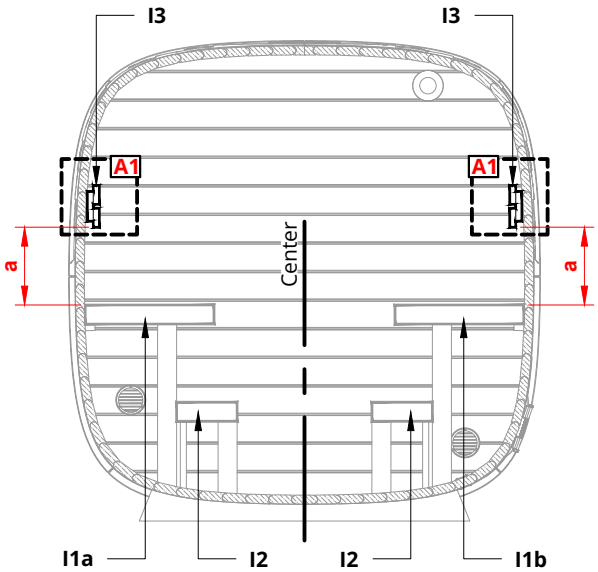

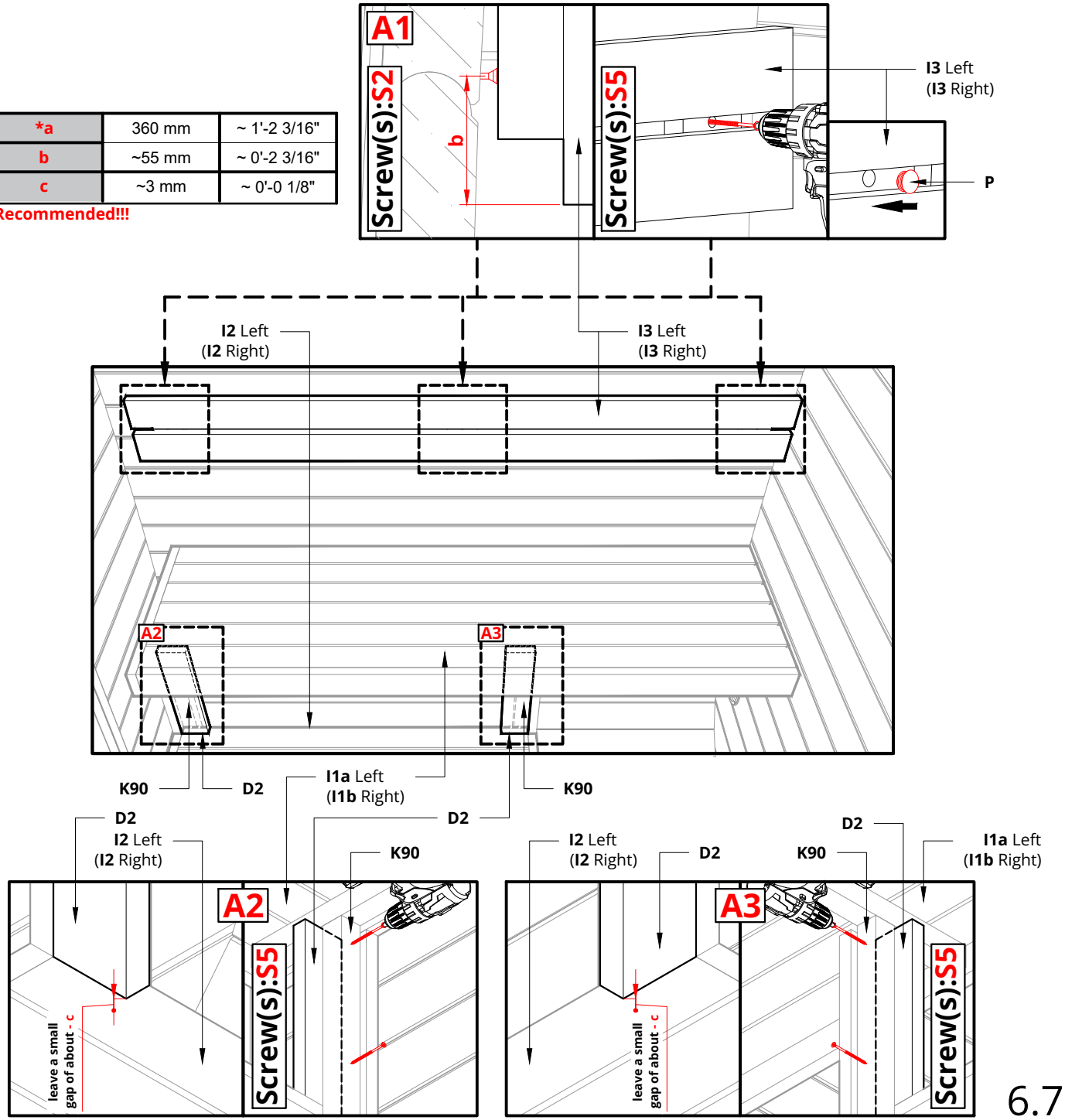

Installation is suitable for all wall options!

Install floor mat F1!
Install the thermal protection plate H1!
(Optional)

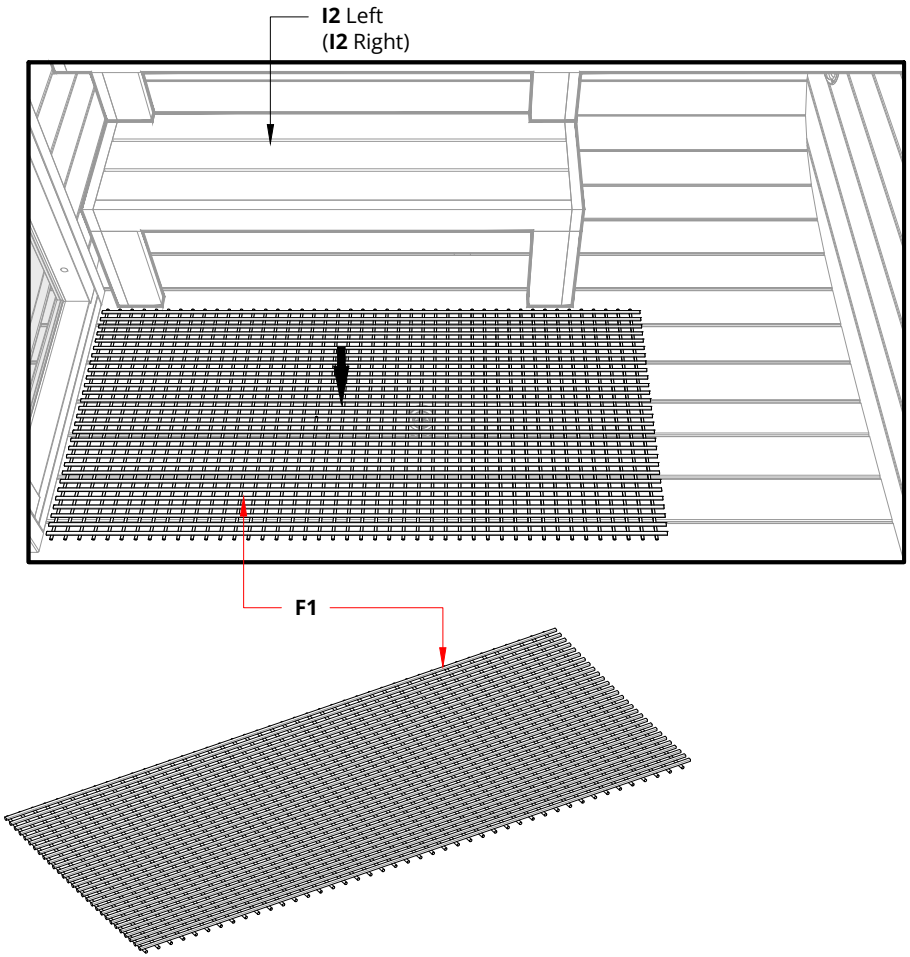

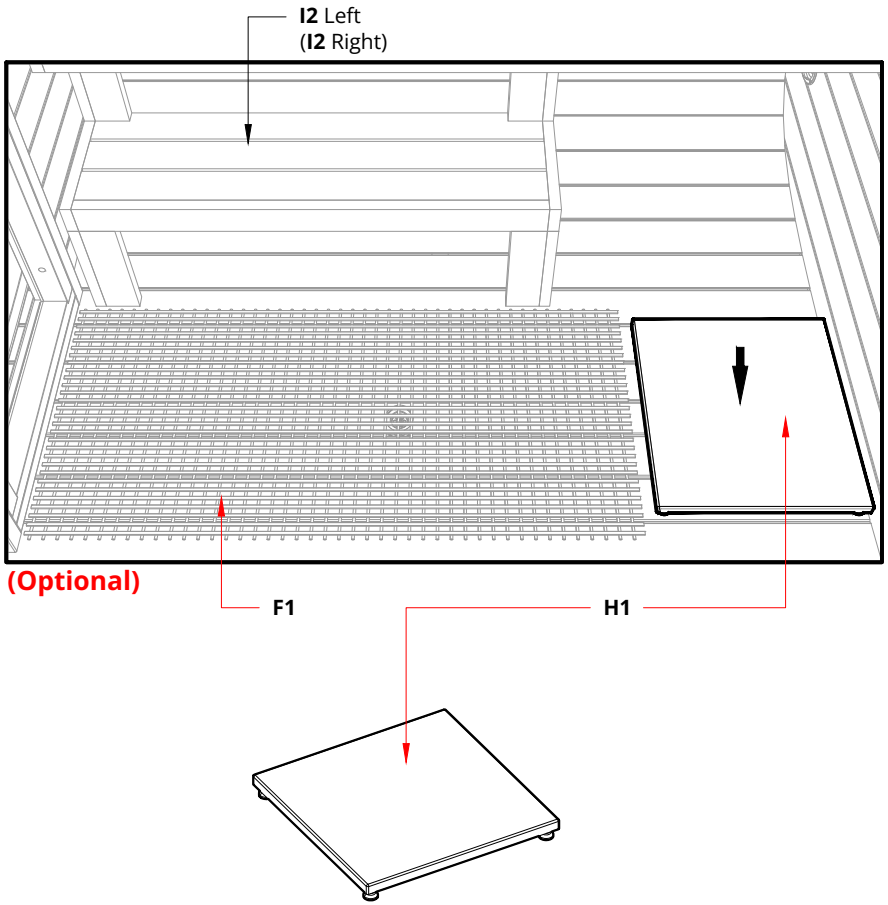

Screw(s)*	Name:	Quantity:
	S7	6
	S5	4

*Screw dimensions - Bench assembly detail list

NB! use a level

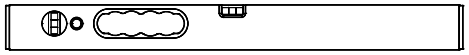

Mark the cutting line on D1 from the upper edge of I2!
Remove D1 and cut along the marked line!
Reattach the bottom part of the cut piece!
Take the measurement from the top bench leg K90 and add ~28 mm [~0'-1 1/8"]!
Install square wood(s) K50 to the Back wall by following the instructions in the pictures!

Repeat these steps on the other side as well!

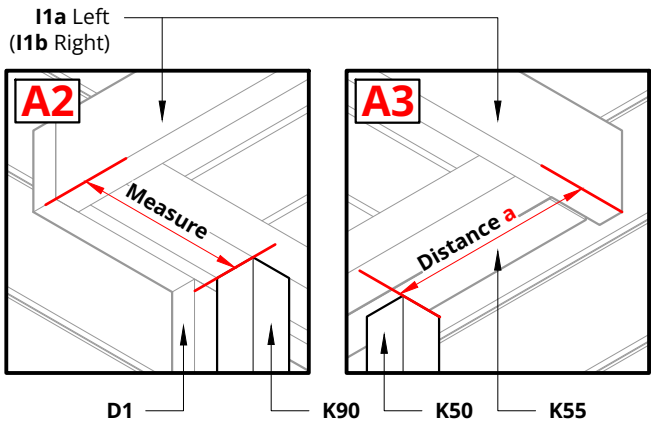

Distance a = Measure + 28mm [~0'-1 1/8"]

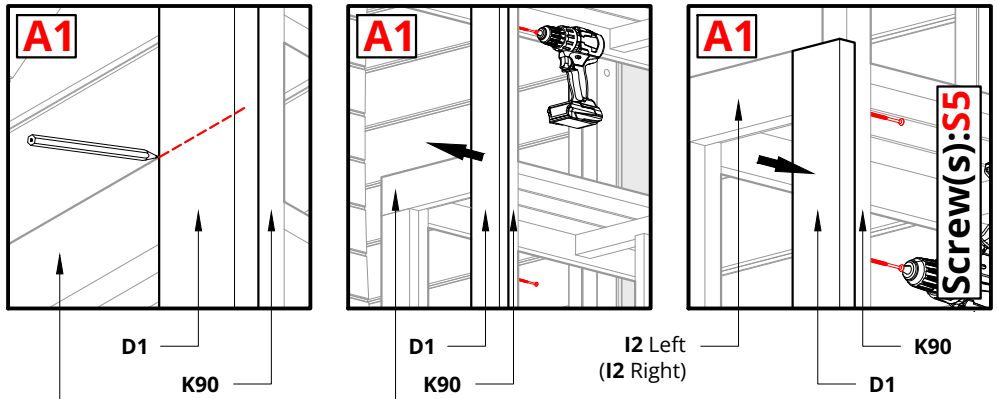

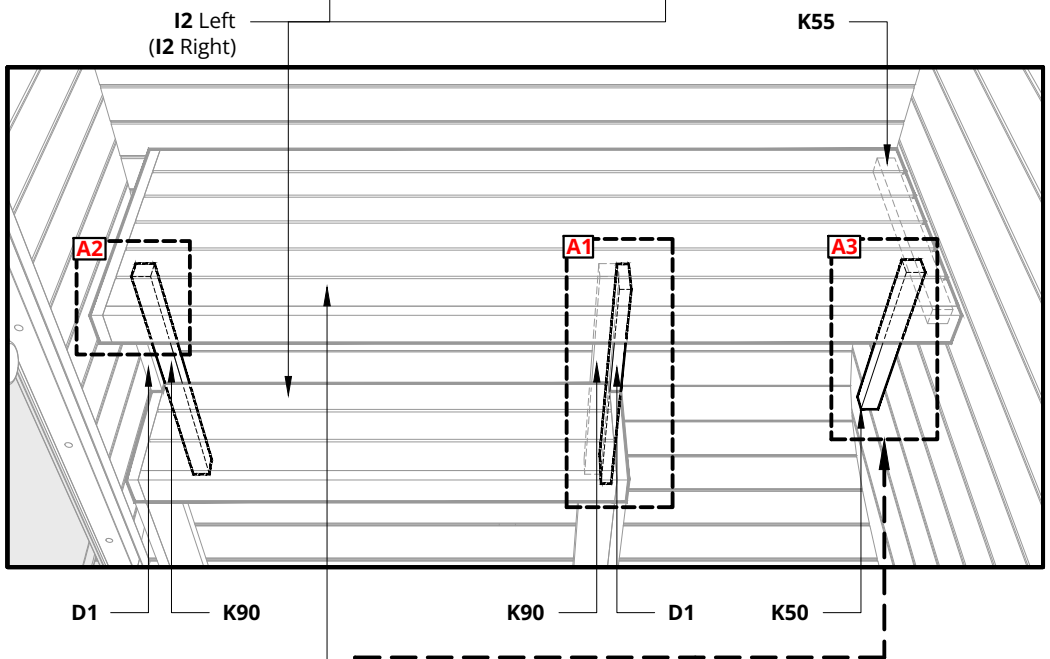

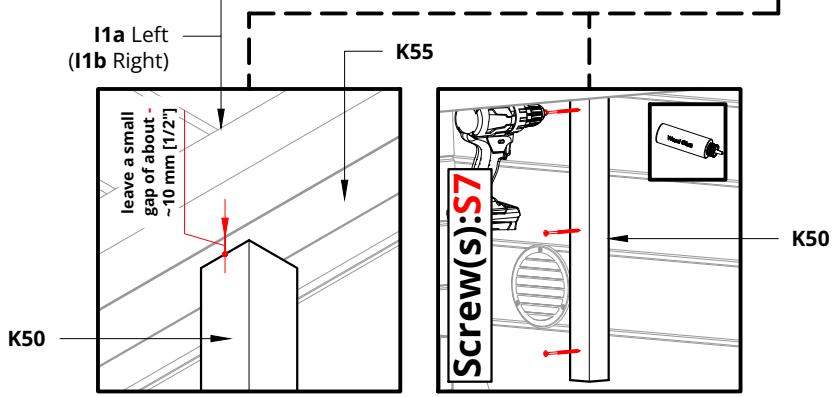

Notice!

Drill 4mm hole in the K... square woods before screwing.

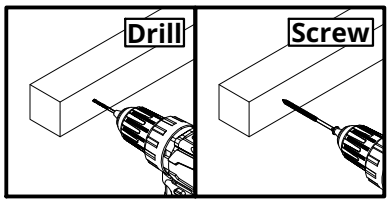

Use glue!

Screw(s)*	Name:	Quantity:
	S5	12

*Screw dimensions - Bench assembly detail list

Please countersink the screw head(s)!

Install the bench skirt(s)!
Repeat these steps on the other side as well!

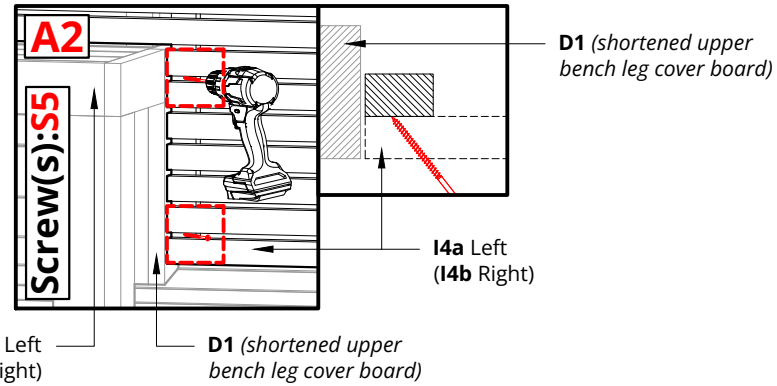

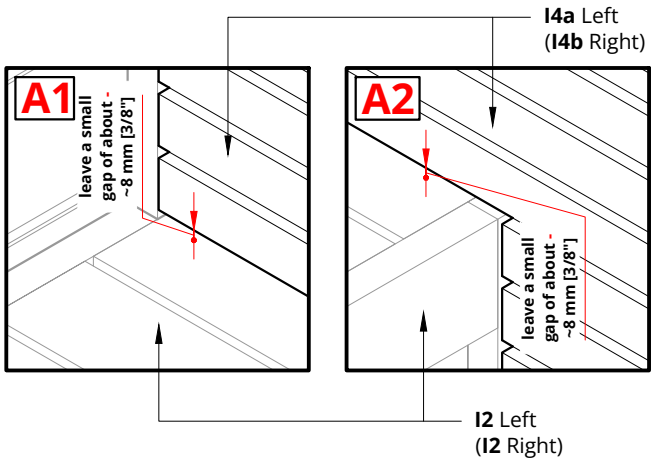

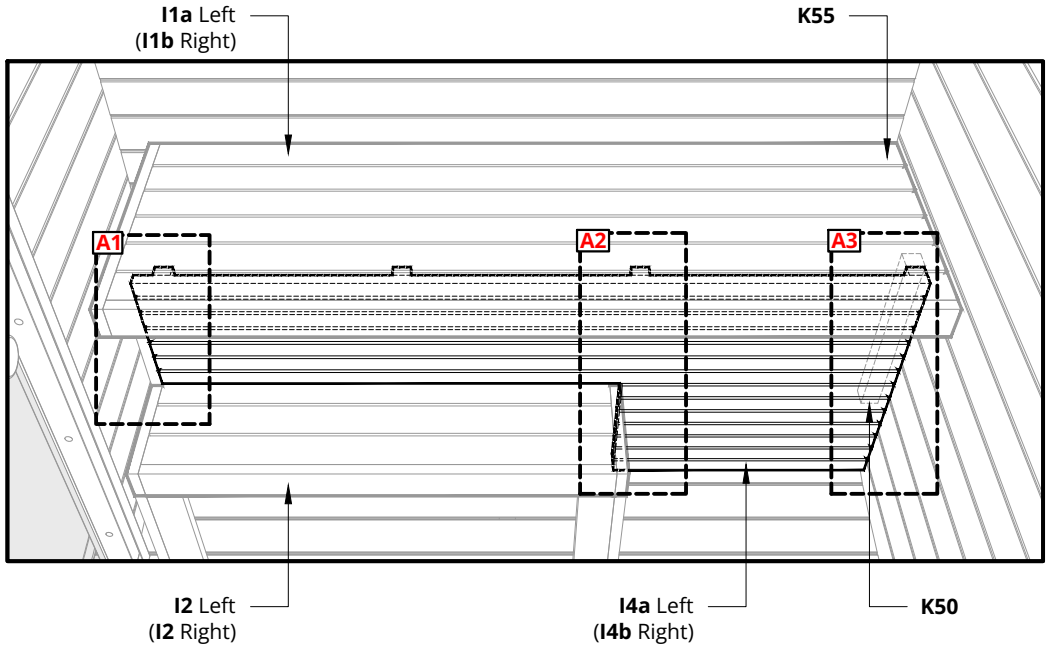

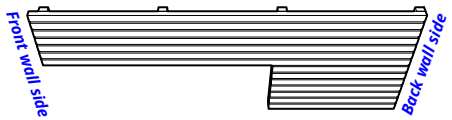

Bench skirt **I4a** Left

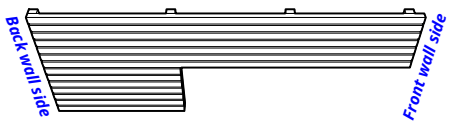
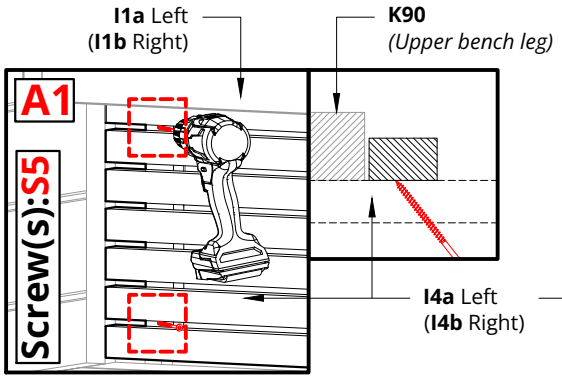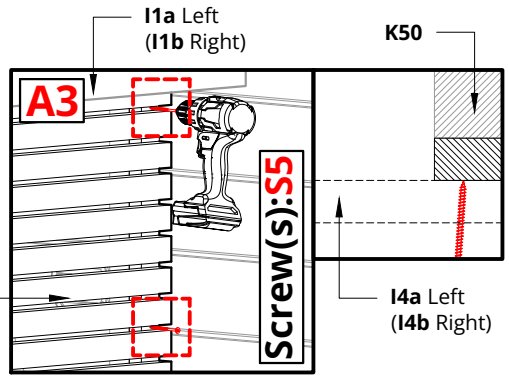
Bench skirt **I4b** Right