Back view
(from inside)

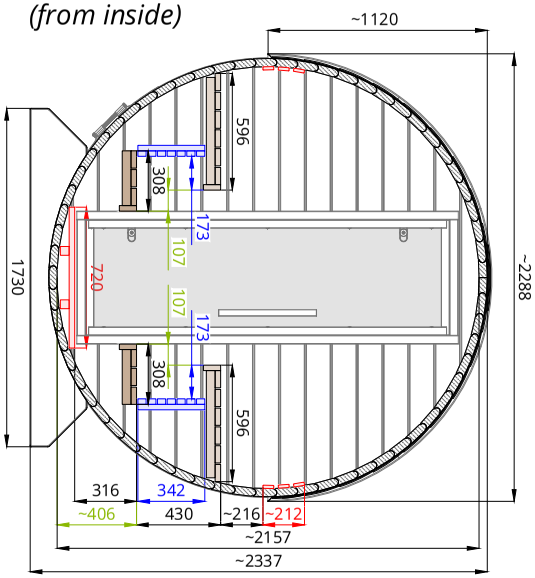

Front view
(from inside)

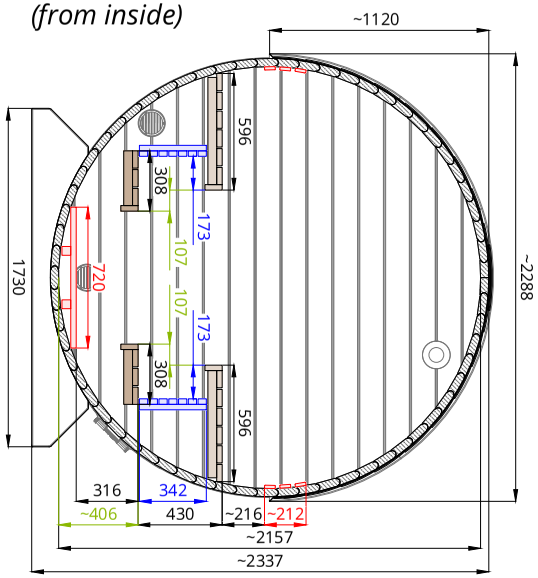

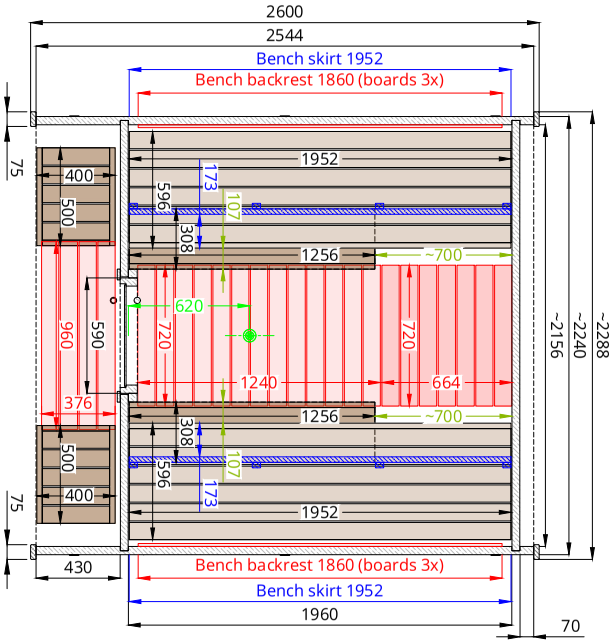

Back view

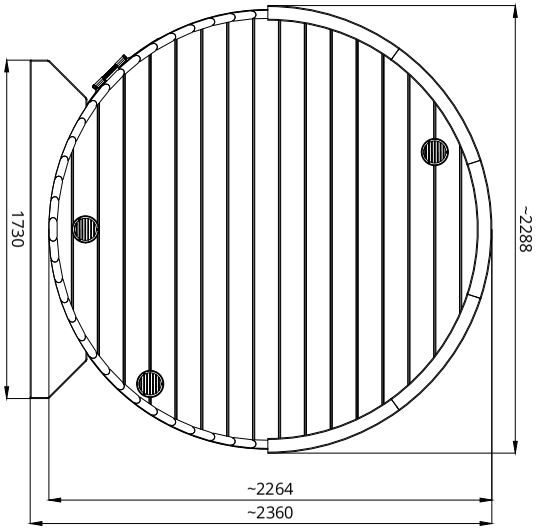

Front view

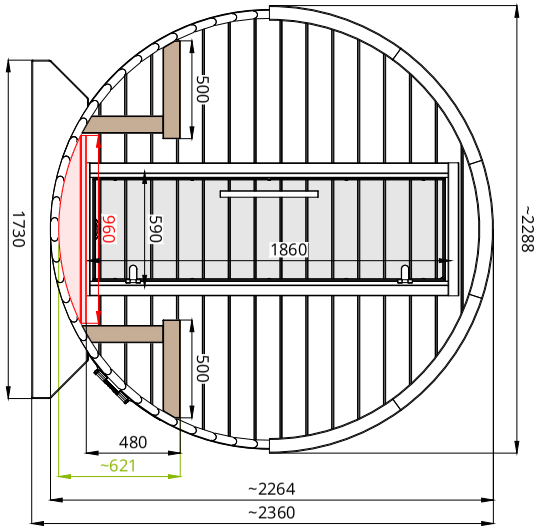

Layout of the sauna legs

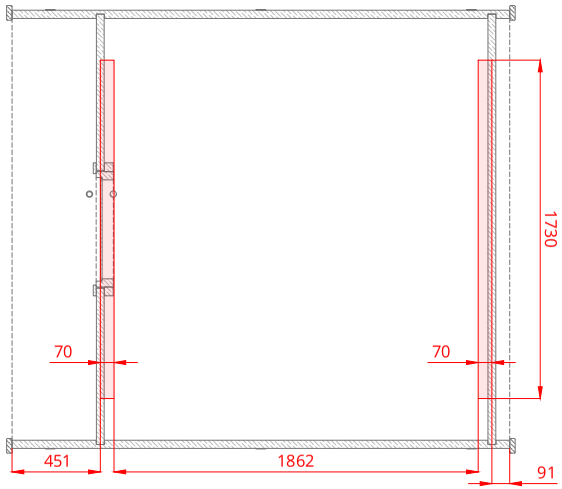

Lerra PLUS (Barrel 2.2)

2.24 x 2.6(t. 0.43)b 1r v111.S4 *Scale 1:40*

DRW no: L+B2.2x2.6(t.0.43)b1r v111.S4