Section-
(steam room)

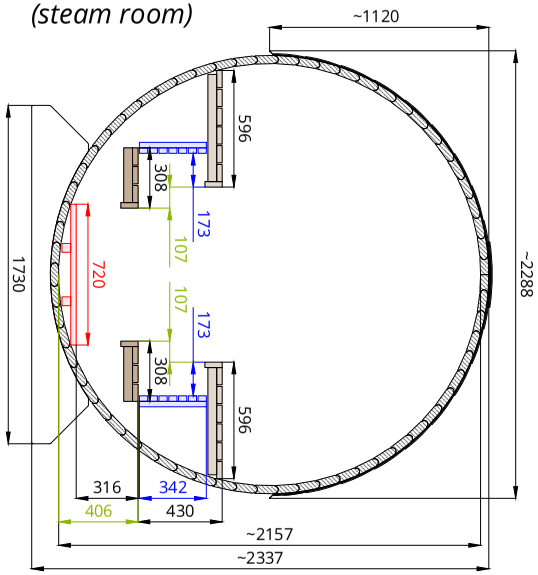

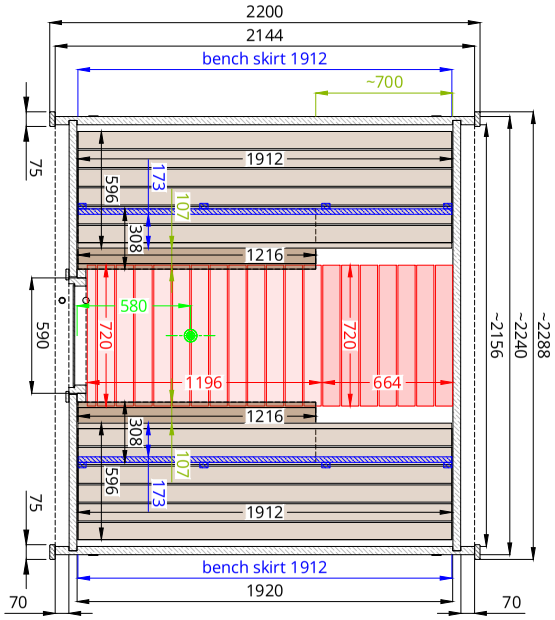

Back view

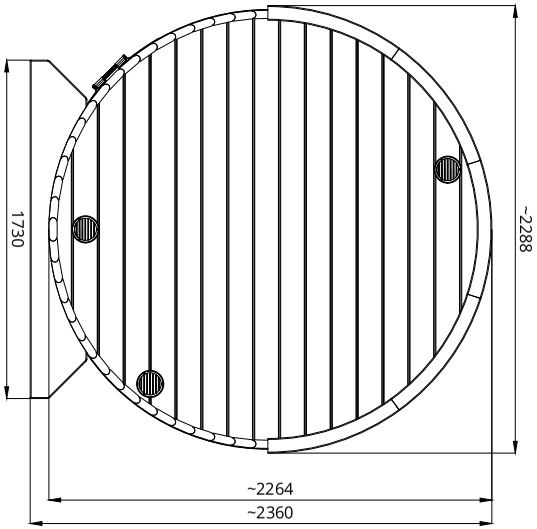

Front view

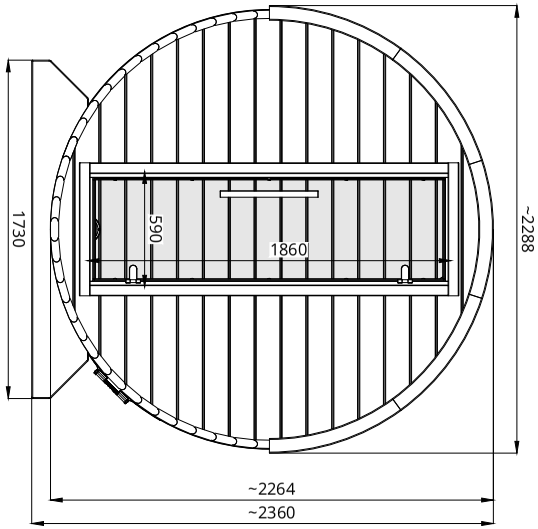

Layout of the sauna legs

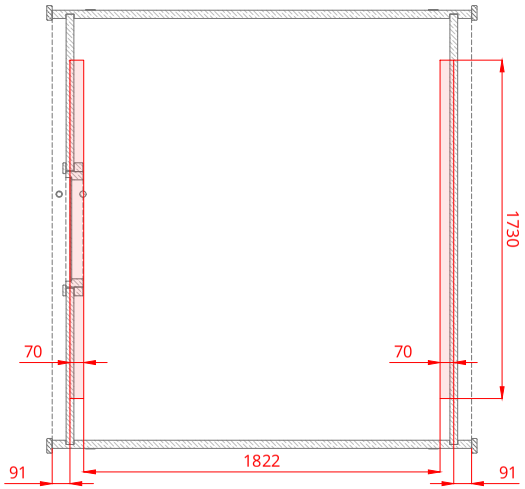

Lerra PURE (Barrel 2.2)
2.24 x 2.2b 1r v111.S3 *Scale 1:40*

DRW no: LB2.2x2.2b1r v111.S3